This is a digital copy of a book that was preserved for generations on library shelves before it was carefully scanned by Google as part of a project to make the world's books discoverable online.

It has survived long enough for the copyright to expire and the book to enter the public domain. A public domain book is one that was never subject to copyright or whose legal copyright term has expired. Whether a book is in the public domain may vary country to country. Public domain books are our gateways to the past, representing a wealth of history, culture and knowledge that's often difficult to discover.

Marks, notations and other marginalia present in the original volume will appear in this file - a reminder of this book's long journey from the publisher to a library and finally to you.

Usage guidelines

Google is proud to partner with libraries to digitize public domain materials and make them widely accessible. Public domain books belong to the public and we are merely their custodians. Nevertheless, this work is expensive, so in order to keep providing this resource, we have taken steps to prevent abuse by commercial parties, including placing technical restrictions on automated querying.

We also ask that you:

+ *Make non-commercial use of the files* We designed Google Book Search for use by individuals, and we request that you use these files for personal, non-commercial purposes.
+ *Refrain from automated querying* Do not send automated queries of any sort to Google's system: If you are conducting research on machine translation, optical character recognition or other areas where access to a large amount of text is helpful, please contact us. We encourage the use of public domain materials for these purposes and may be able to help.
+ *Maintain attribution* The Google "watermark" you see on each file is essential for informing people about this project and helping them find additional materials through Google Book Search. Please do not remove it.
+ *Keep it legal* Whatever your use, remember that you are responsible for ensuring that what you are doing is legal. Do not assume that just because we believe a book is in the public domain for users in the United States, that the work is also in the public domain for users in other countries. Whether a book is still in copyright varies from country to country, and we can't offer guidance on whether any specific use of any specific book is allowed. Please do not assume that a book's appearance in Google Book Search means it can be used in any manner anywhere in the world. Copyright infringement liability can be quite severe.

About Google Book Search

Google's mission is to organize the world's information and to make it universally accessible and useful. Google Book Search helps readers discover the world's books while helping authors and publishers reach new audiences. You can search through the full text of this book on the web at `http://books.google.com/`

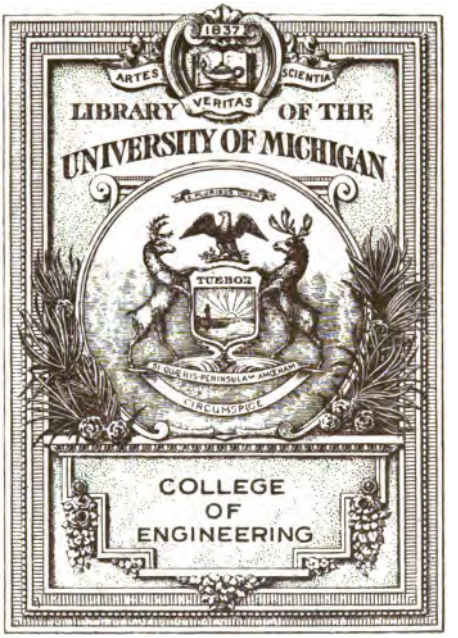
1837
ARTES
VERITAS
SCIENTIA
LIBRARY OF THE
UNIVERSITY OF MICHIGAN
TUEBOR
SI QUÆRIS PENINSULAM AMŒNAM
CIRCUMSPICE
COLLEGE
OF
ENGINEERING

TA
1
.M

UNIV. OF MICH.

Charles Williams

President of the Association,

1895.

TRANSACTIONS,

1895.

PUBLISHED BY THE ASSOCIATION.

MANCHESTER:
HERALD & WALKER, PRINTERS, POOL FOLD CHAMBERS, OFF CHAPEL WALKS.
1896.

CONTENTS.

1895.

	PAGE.
Index	—
List of Plates	—
Inaugural Address by the President, Sir E. Leader Williams	1
Economical Lighting of Public and Private Buildings, Workshops, &c., by John West.	25
Electricity as the future Motive Power in the Textile Industries, by G. H. Firth and D. Selby-Bigge .	53
Cylinder Condensation and some means of combating same, by W. H. Booth	109
Pistons and Piston Valves, by Jos. Butterworth . .	157
Electric Locomotives	193
Annual Report of Council, 1895	244

Engineering
Engin.
Sutton
4-2-27
14467

INDEX.

1895.

ADAMSON, DANIEL, on Electric Driving, 91.

ADAMSON, JOSEPH, on Electric Driving for Cotton Mills, 79.—Electric Locomotives, 229.

ADDRESS OF PRESIDENT, Sir E. Leader Williams, 1.—Early history of canals, 2.—Suez Canal, 3.—Manchester Ship Canal, 7.—Vote of thanks, 20.

ANNUAL REPORT OF COUNCIL.—Amendment of Rule 7, 243.—Annual Meeting, 243.—Report, 244.—Additions to Membership, 244, 245, 246.—Members deceased, 245.—Members erased, 245.—Meetings held, 246.—Papers read and Discussions held, 247.—Anniversary dinner, 248.—Opening of discussion session, 253.—Library, 256.—Excursions: visit to Barrow, 258; visit to Liverpool, for inspection of s.s. "Teutonic," 261; Description of Salford Corporation gas works, 262.—Obituary: Lindsay Burnet, 264; C. Farmer, 265; James Hall, 265; R. Kilgour, 265; George Vickers, 265; F. Meixner, 265.—Treasurer's General Cash Account, 266.—Superannuation Fund Account, 267.

ASHBURY, T., remarks on Address, 21.—Gas Lighting, 47.—Electric Driving for Cotton Mills, 83.—Pistons, 183.—Electric Locomotives, 228.

BOOTH, W. H., Paper on Cylinder Condensation, and some means of combating same, 109.

BUTTERWORTH, Jos., Paper on Pistons and Piston Valves, 157.

CLIREHUGH, on Electric Driving for Cotton Mills, 89.

COLLIER, C. H., on Electric Appliances, 233.

CONSTANTINE, E. G., on Gas Lighting, 44.—Cylinder Condensation, 131.—Amendment of Rule 7, 243.

CYLINDER CONDENSATION AND SOME MEANS OF COMBATING SAME: Paper on, by W. H. Booth, 109.—Watts' recognition of necessity of hot cylinders, 109.—Causes of water in the cylinder, 111.—Watts' jacket, 111.—The Cornish cycle, 112.—The Woolf engine, 113.—The jacket,

114.—Reasons for and against compounding, 116.—The action of the internal surfaces of the cylinder, 118.—Superheating, 121.—Saving due to superheating, 123.—Superiority of superheat to jacket heat, 123.—Summary, 123.—Absolute horse-power, 124.—The Field engine, 125.—The steam turbine, 126.—Various means of combating cylinder condensation, 126.—Conclusion, 127.—Appendix: Descriptions of steam jackets, 127; Superheaters, 128.—Discussion, 131.—Reply, 151.—11 Diagrams.

DANIELS, T., Remarks on Address, 20.—Gas Lighting, 41, 47.—Electric Driving, 82.—Pistons and Piston Valves, 172.—Electric Locomotives, 227, 230.

DAY, CHAS., on Cylinder Condensation, 136.

DONNELLY, J., on Piston Valves, 185.

DIXON, SAMUEL, on Gas Lighting, 45.

DUFF, E. J., on Gas Lighting, 46.—Electric Driving, 90.

ELECTRIC LOCOMOTIVES: Paper on, by Edgar Worthington, 193.—Introduction, 193.—Commercial development, 194.—Electric railways in Europe, 196.—Electric versus the cable system, 197.—Advantage claimed for the employment of electricity, 198.—Principles, 198.—Requirements of electric motors, 200.—Starting power, 201.—Currents and method adopted for picking up the currents, 204.—Examples, 209.—Locomotives driven by storage batteries, 210.—Geared locomotives, 211.—Direct-driven locomotives, 216.—The Heilmann locomotive, 220.—Differences of the 1893 and 1895 Heilmann locomotive, 222.—Cost, 225.—Conclusion, 227.—Discussion, 227.—Reply, 235.

ELECTRICITY AS THE FUTURE MOTIVE POWER IN THE TEXTILE INDUSTRIES: Paper by G. H. Firth and D. Selby-Bigge, 53.—General arrangement of work, 53.—Mechanical transmission of power, 55.—Defects of various methods of distribution, 56.—Friction, 58.—Its determination, 59.—Belts v. Ropes, 57.—Distribution from various centres, 61.—Losses from this cause considered, 61.—Electrical transmission and distribution of power, 62.—Its advantages and defects, 63.—Cost compared with mechanical methods, 69.—Examples of actual application in factories, 70.—Examples of possible application to textile machinery, 71.—Discussion, 73.—Replies, 97, 99.—Diagram,

FIRTH, G. H., Paper on Electricity as the future Motive Power in the Textile Industries, 53.

FULTON, DAVID, on the Field Engine, 139.—Pistons, 177.

GAS LIGHTING, ECONOMICAL FOR BUILDINGS, &c: by John West, 25.—Introduction, 26.—Method of determining the relative power of artificial light, 27.—Photometer, 27.—Gas burners, 28.—Compound substances existing in gas, 29.—Chemical changes consequent upon combustion, 30.—Pressures of gas sent from gas works, 31.—Argand burner, 32.—Difference between old and modern burners, 33.—Regenerater burners, 34.—Incandescent gas lighting, 35.—Experiments in engineering shops, 35.—Average results, 36.—Comparison of cost of lighting between old burners and the incandescent type, 37.—Cost of incandescent electric lighting versus incandescent gas lighting, 39.—Discussion, 41.—Reply, 47.

GASS, G. P., Junr., on Electric Driving for Cotton Mills, 85.

GENDALL, W. H. S., on Gas Lighting, 42.

GREGORY, RICHARD, on Superheaters, 135.

HARTLEY, JAS., on Cylinder Condensation, 142.

HUNTER, W. H., on Piston Valves, 178.

JENKINS, W. J., on Cylinder Condensation, 144.

LEWIS, G., on Pistons, 184.—Electric Locomotives, 233.

LISTER, R. R., on Electric Locomotives, 230.

MANNOCK, T., on Piston Valves, 179.

NASMITH, JOS., on Gas Lighting, 42.—Electric Driving for Cotton Mills, 75, 97.

PISTONS AND PISTON VALVES: Paper on, by Jos. Butterworth, 157.—Pistons: Earliest forms of pistons, 157.—Ramsbottom's experiments to determine the correct form of piston ring, 158.—The conditions under which piston packings work, 159.—Influence of oil on same, 160.—Different types of piston packings, 161.—Manufacture of piston packings and pistons, 165.—Correct form of tail rod, 165.—

Different methods of fastening pistons to their rods, 166.—Piston valves, 167.—Altered conditions of working compared with ordinary piston packings, 168.—Mc.Naught's piston valve, 168.—The Willan's piston valve, 169.—Method of adapting piston packing to suit piston valve, 169.—Apparatus for testing piston packings, 170.—Application of main and cut-off piston valves to a cylinder, 171.—Discussion, 172.—Reply, 185.—Diagrams, 9 plates.

REA, A., on Electric Driving for Cotton Mills, 87.

REED, F. W., on Gas Lighting, 46.

RENOLD, HANS, on Electric Driving for Cotton Mills, 86.—Electric Locomotives, 233.

SAXON, ALFRED, on Gas Lighting, 47.—Electric Driving, 79.—Pistons, 175, 183.

SAXON, GEORGE, on Pistons, 173.

SAXON, JAMES, on Electric Driving for Cotton Mills, 88,

SAYERS, R. J. H., on Gas Lighting, 46.

SCHOFIELD, JOHN, on Gas Lighting, 45.

SELBY-BIGGE, D., Paper on Electricity as the future Motive Power in the Textile Industries, 66.

SIMPSON, C. L., on Superheaters, 140.

TAYLOR, JOHN, on Electric Driving for Cotton Mills, 86.—Pistons, 174.

TETLOW, Z., on Electric Locomotives, 230.

WALTHEW, JAS., on Amendment of Rule 7, 243.

WALTON, T., on Pistons, 183.

WEBB, HENRY, on Gas Lighting, 41.—Electrical Power Transmission, 73, 96.—Cylinder Condensation, 131, 150.—Pistons, 182.—Electric Locomotives, 231.

WEST, JOHN, Paper on the Economical Lighting of Public and Private Buildings, 25.

WILLIAMS, SIR E., President's Inaugural Address, 1.—Electric Driving, 82.

WORTHINGTON, EDGAR, Paper on Electric Locomotives, 193.

LIST OF PLATES.

To illustrate "Electricity as the future Motive Power, &c." Page 108.

Diagram showing power absorbed by mule during work, by J. Nasmith.

To illustrate "Cylinder Condensation." Page 156.

Plate 1. Diagram of ordinary single-acting Cylinder.
,, of single-acting Cylinder with Cornish exhaust.
,, 2. ,, from Woolf Engine.
,, from compound Engine with receiver.
,, 3. ,, showing evaporation during expansion.
,, 4. ,, from jacketed Cylinder.
,, 5. ,, Cylinder.
,, 6. ,, magnified rough surface.
,, Cylinder jacket.
,, 7. ,, 40 H.P. Cylinder with steam jacket.
,, 8. ,, jacketed Cylinder.
,, 9. ,, improved Superheating Apparatus applied to a Lancashire Boiler.
,, 10. ,, Schwoerer Superheater.
,, 12. ,, Mc.Phail and Simpson's dry steam Generator.

To illustrate "Pistons and Piston Valves." Page 190.

Plate 1. Early form of Piston.
,, 2. Ramsbottom's Apparatus for determining the proper form of Piston Ring.
,, 3. Sketch illustrating the conditions under which Piston Rings work.
,, 4. Diagram showing pressure on front of Ring.
Diagram showing variation of pressure in front of Ring.
,, 5. Diagram showing variation of pressure on front Ring for one stroke of L.P. piston.
Diagram showing net pressure behind Rings of steam-packed Piston.
Diagram showing net pressure behind Ring, from back of which steam is excluded.
,, 6. Two types of steam-packed Pistons.
,, 7. Ring and Spring Coil suitable for a Piston Valve.
,, 8. Apparatus for testing Piston Spring.
Do. do.
,, 9. Cylinder fitted with main and cut-off Piston Valves.

INAUGURAL ADDRESS

BY THE PRESIDENT,

SIR E. LEADER WILLIAMS,

M.INST.C.E., M.INST.M.E., &c.,

DELIVERED SATURDAY, 12th JANUARY, 1895.

In pursuance of the usual custom I have now the pleasure of delivering the annual address, and also of thanking you for the honour you have conferred upon me by electing me your President for the coming year.

It has to some extent been customary to review the improvements in engineering science since the last address, but on this occasion, I shall confine myself to the branch of our profession in which I have been most closely engaged.

In the limited time at my disposal, I can only give a brief epitome of two of the great works that have been carried out successfully during the last twenty-five years, the Suez and the Manchester Ship Canals.

Lord Bacon wrote: "There be three things which make a nation great and prosperous—a fertile soil, busy workshops, and easy conveyance for men and commodities from one place to another." Surely the sea and inland navigations fulfil the last requirement. I cannot here help also quoting a passage from the first prospectus of the Liverpool and Manchester Railway, which appeared in the *Times* of December 29th, 1825, as the language used applies equally to water-ways as to railways.

EXTRACT FROM "THE PROSPECTUS OF THE LIVERPOOL AND MANCHESTER RAILWAY COMPANY. 1825."

"Moreover, it would be to take a very narrow and imperfect view of the "great question now under discussion to limit our consideration to the

"immediate accommodation of the mercantile classes—to the pecuniary "saving proposed to the travelling community—or even to the still more "important saving to the consumer of coals, and of every description of "goods conveyed between Liverpool and Manchester. The question "demands a wider survey and the consideration of more distant results. "We must contemplate the important effects upon the commerce of the "nation which are to be anticipated on the one hand, from affording, or, on "the other hand, from denying, facilities to the commercial operations of "this great country.

"But the subject does not end here. It becomes a question of serious "import whether this country, which is indebted for so much of her wealth "and power and greatness to the bold and judicious application of "mechanical science, shall now pause in the career of improvement, while "it is notorious that other nations will adopt the means of aggrandisement "which we reject; whether England shall relinquish the high vantage-"ground which she at present possesses, not more with reference to the direct "operations of commerce and manufactures than generally in the successful "application of the most important principles of science and of art."

The Early History of Canals is a matter of some interest. The advantages of Inland Navigation were obviously so great, that the Royal Canal in China was constructed as early as the year 980. Its length is upwards of 825 miles, with many branches in addition to the main canal. It occupied 30,000 men for 43 years in construction. The Suez and the Corinth Canals almost traverse the same ground that was occupied by early canals of smaller size. In England the Romans constructed canals, one of which, the Foss Dyke Navigation, still is used. It connects the river Witham at Lincoln with the river Trent at Torksey.

The introduction of Locks enabled Canals to be constructed through a country requiring different levels, thus saving great cost in excavation. There is some doubt as to the date of their introduction. Flashes in rivers were used before locks were invented, which appears to have been in Italy in the 15th century. In the year 1481, two brothers of Viterbo, named

Domenico, watch makers, designed a chamber with a double pair of gates for canals, and it was adopted in the canal della Martesana.

THE SUEZ CANAL.

No waterway is more important to commerce than this Canal, it being the complete fulfilment of the early canals made across the same isthmus so far back as the reign of Darius. Napoleon, during the invasion of Egypt, had a survey made for a Canal, but the works of the Canal were not carried out, mainly owing to the erroneous levels, which were said to have proved that the Red Sea was 30 feet above the level of the Mediterranean.

Surveys were made by Captain Chesney in 1830, and by Mr. Robert Stevenson in 1847, with the object of determining the correct levels and the best line for the Canal.

From 1849 to 1854, M. de Lesseps and his Engineers were occupied in maturing the project. In 1855 an International Commission was formed to examine the proposed course. The English Engineers were Robert Stevenson, A. M. Rendel and J. R. McClean. The Commission agreed that a Canal was practicable, but they differed as to line of route and the level of Canal. The English Engineers were of opinion that the level should be raised twenty-five feet above sea level by locks at each end of the canal. The Canal was to be supplied with water from the river Nile.

This high-level Canal would have been nearly all excavated above the natural drainage of the country, and the embankments, it was estimated would require 70 million cubic metres of excavation. The English Engineers considered that the proposed low-level canal would rapidly silt up; that a channel could not be maintained by dredging at Port Said; that there would be deposits of salt through evaporation of the salt water, and that there would be currents of considerable velocity in the Canal. Time, however, has proved these predictions to be erroneous;

if the high-level canal had been adopted the safety of the canal would have depended upon the embankments, and much silting would have taken place from the constant supply of water from the river Nile.

The Suez Canal is the only large Ship canal at one uniform level without locks. The failure of the Panama Canal was largely due to M. de Lesseps attempt to apply this system where it was not properly applicable. During M. de Lesseps last visit to Manchester I had several conversations with him in reference to the Panama Canal. The capital had not then been raised for the works of the Manchester Ship Canal, but we were overlooking the site of the canal and docks at Manchester, discussing the question of locks in ship canals.

M. de Lesseps said his success on the Suez Canal was such as to prove that the Panama Canal could be constructed and worked without locks. I replied the two cases were not similar. His answer was that the English engineers were wrong as to the Suez Canal, and locks were not necessary at Panama. In 1888, however, the original plans of the Panama Canal had to be altered, and eight locks were designed to reduce the amount of the great Culebra excavation. This alteration was too late to save the canal.

M. de Lesseps did not dispute the advantage of locks on the Manchester Ship Canal, as the raising of the water to a level which admits of shipping lying on the canal, alongside wharves or works, at a suitable height above the canal for loading or discharging, was, he considered, a great advantage in a canal which is virtually an elongated dock.

The Suez Canal starts at Port Said on the Mediterranean, and runs nearly due south to Suez on the Red Sea, with a slight deviation in its course to enable it to traverse the Bitter and other lakes. Its length is about 100 miles, and it was originally formed to a bottom width of 72 feet, and a depth of

26 feet. The gauge of a canal for navigation purposes is the depth and the bottom width; the sides may change from being almost vertical to a very flat slope, and therefore the top width may be very variable, depending upon the character of the soil through which the canal is constructed.

The excavation of the Suez Canal for the first 45 miles from Port Said very little exceeded the 26 feet of depth required for the canal; parts of the Bitter Lakes required no dredging.

The deepest cutting was 85 feet. The material was generally sand, with some clay. At the Chatough cutting, south of the Bitter Lakes, rock was found. The total amount of excavation was nearly one hundred million cubic yards. A freshwater canal from the Nile had to be constructed for carriage of materials and the supply of fresh water.

At Port Said a harbour was formed by constructing two long converging piers, one on either side of the canal entrance, projecting into the Mediterranean so as to prevent the silt flowing from the Nile blocking up the mouth of the canal. By dredging, deep water is maintained in the harbour. At the other end of the Canal, in the Red Sea, an embankment and a pier protect the entrance.

If the Suez Canal could have been cut in a direct line by the shortest route, its length would have been only 70 miles; the increase to nearly 100 miles is due to the French engineers taking advantage of the beds of the lakes Menzaleh, Ballot, Timsah and the Bitter Lakes, thus facilitating the work by greatly diminishing the amount of excavation.

Lake Timsah and the Bitter Lakes were quite dry before the cutting of the canal, and were filled with water from the Red Sea and Mediterranean. No less than 60 dredgers were employed in dredging a deep channel through those lakes, or on other parts of the canal.

The bottom width is not sufficient to enable large vessels to pass each other, therefore, specially designed passing places are provided. As the traffic has so largely developed, the canal is being dredged out to a greater width, and the depth is being increased to 28 feet. The maximum draught now allowed is 25ft. 7in.; it was formerly 24ft. 7in. The total number of ships that passed through the canal in the year 1893 was 3,341, but only 164 exceeded 24 ft. 7 in. draught.

The first sod of the Suez Canal was cut on the 25th April, 1859. The Company had for the first four years a supply of from 15,000 to 20,000 men found by the Egyptian Government. These were withdrawn in 1864, but the Government paid the Canal Company an indemnity of £1,520,000, and it also gave up customs dues on the Canal Company imports, tolls on the Freshwater canal, quarries, storehouses, &c.

The contracts were let for £4,588,800, but the total cost of the canal is nearly £20,000,000. The cost of the work now in progress for enlarging the canal is estimated at £8,000,000.

The canal was partially opened in 1869 and was completed before the end of that year. In 1870 the number of ships passed through the canal was 657, in 1891, 4,207. The transit receipts in 1870 were 5,159,327 francs, in 1891, 70,667,361 francs. The number of passengers carried is nearly 200,000 a year. Out of the total net tonnage in 1893, 7,659,068 tons, no less than 5,752,934 tons were carried in British ships.

In 1883 the average time of duration of passage was 48½ hours. Owing to the adoption of the electric light and working by night, the average time has been reduced to 20¾ hours. The work now in hand for enlarging the canal will further diminish this time.

M. de Lesseps originally named three million tons as the amount that would annually pass through the canal. In 1868, before the opening of the canal, his faith in his enterprise was

increased and he named six million tons. The actual quantity has averaged eight million tons nett during the years 1890 to 1894.

The Suez Canal has been a great financial success. It took several years to develop the traffic, but it paid such high dividends that a reduction of tolls has been made and pilotage dues are not now charged.

Before the canal was constructed the "Edinburgh Review" stated the canal was "utterly impracticable." The "Quarterly Review" said it was "commercially unsound." The result, however, remains that it has been successfully constructed; it has tended greatly to advance the trade of the world, and more particularly that of the British Empire, and, although the Capital of the Company has been increased to twenty millions sterling, the twenty pound shares are now selling at upwards of one hundred and twenty pounds each.

THE MANCHESTER SHIP CANAL.

The work I now propose to deal with, is one with which my name is identified, but I shall ever remember that the successful completion of the canal is due to the combined energy of men who have given much time and money to the undertaking, and also to the way in which the staff of the Company have worked together from first to last.

The tidal scheme of Mr. Fulton was abandoned by the promoters of the canal after my plan of a locked canal was approved by Mr. Abernethy. Three severe Parliamentary contests followed, when powers were obtained to carry out the work. It is worth noting that in the Session of 1883 the Bill passed the House of Commons, in 1884 the House of Lords, and in 1885 the Act was obtained, as it passed both Houses in the same Session; thus the Ship Canal obtained the approval of both

Houses of Parliament twice over, during three successive Sessions.

The original scheme was to utilise the tideway of the Mersey to Runcorn, from whence a locked canal passed inland to near Warrington, and then up the Mersey and Irwell valleys to Manchester. The strong opposition of Liverpool to the tidal portion of the scheme caused the promoters to adopt a plan by which the canal was carried along the Cheshire side of the estuary. It was originally proposed to have the canal 20ft. deep and 100ft. wide at bottom; this was to reduce cost, but experience has already proved the advantage of the increased size adopted, 120ft. bottom width and 26ft. depth, without which the largest class of vessels could not have used the canal. The lock sills are 28ft. below ordinary water level, to allow of dredging to that depth if hereafter thought advisable.

The soil through which the canal was excavated was of a most varied character. Hard and soft sandstone rock, boulder and other clays, gravel and sand, loam and silt, alternating in layers, without any regularity either as to position or depth. It is almost always the case to have this difficulty in large river valleys, and the rapid changes made it very difficult to estimate the slopes required before the work was partly completed and the various strata laid open. At Latchford, within a short distance in the heavy rock cutting, the rock altogether disappeared, and was not found by a boring sunk 100ft. below the bottom of the canal, although the canal had been cut through the rock for a mile, almost close on either side of the boring.

It has been asked why not have taken the canal through higher ground, and so avoid the great difficulty of cutting a large canal subject to heavy floods? I have not, however, yet heard how then the supply of water was to be obtained at any reasonable cost, or how the railways were to be carried over the canal. By utilising the valleys river water is obtained—

not of the desired quality, alas!—and the railways are taken over the canal at a much less cost than by any other plan.

For the first three years, when the late Mr. Walker was carrying out the work, no floods of any importance occurred. As soon as the Company took possession of the works great floods did most serious damage, and caused great delay and cost.

The question of the materials to be used for the construction of the docks and locks was an important one, not only as regards strength and cost but with reference to time, and getting the materials on the ground.

Stone was used from many quarries in Cornwall, Wales, Yorkshire and Cheshire; bricks were made on the works, good clay having been found. 450,000 bricks per week were made at the Thelwall brick yard, and 70,000,000 of bricks were used on the works of the canal. By adopting Portland cement concrete for the main part of the walls of docks and locks, it was possible with the assistance of 230 miles of railway, 173 locomotives, and 6,300 trucks and wagons to complete the work in a reasonable time.

It was considered that the work might be finished in from four to five years, but owing to the unforeseen difficulties and delays it took six years to complete the canal.

For the excavation of the canal nearly 100 steam excavators of various types were employed, some of which were constructed in France and Germany.

The rate of excavation varied from $\frac{3}{4}$ to $1\frac{1}{4}$ million cubic yards per month. As much as 2,400 cubic yards was excavated in ten hours by the German excavators, but their average would be less than 2,000 cubic yards. Like the French type of excavators they are land dredgers suitable only for soft soil. The English excavators have in good soil at times reached nearly 2,000 cubic yards per day, but their average in all soils would be about 700 cubic yards. They are, however, capable

of excavating very hard material, and even rock, when powder is used in advance of the excavator. There were 194 steam cranes, 182 portable and other steam engines, and 209 steam pumps employed on the works, and they consumed about 10,000 tons of coal per month.

The deepest cutting was near Runcorn where, for a short distance, the depth is 66 feet. The largest cutting was at Latchford where, for a distance of 1½ miles, the depth averages 55 feet.

The slopes of the cuttings vary with the nature of the soil, from 1 to 1 to 2 to 1. In the rock cuttings the sides are nearly vertical.

The total amount of excavation in the canal and docks amount to about 50,000,000 cubic yards, 10,000,000 cubic yards of which is sandstone rock. The spoil from the canal was used in filling up the river bends which are cut off by the canal, and in raising the low-lying lands near so as to make them available for being used for shipbuilding and other purposes.

The entrance locks at Eastham are three in number, of various sizes, viz.:—

600 feet	long by	80 feet	wide.
350	do.	50	do.
150	do.	30	do.

and in addition there are two sluices of 20ft. wide each, for assisting to fill the canal, the water level of which will be 14ft. 2in. above the Old Dock Sill at Liverpool, which is about the level of mean high water.

This group of locks can admit a very large amount of shipping every tide, more particularly as on all tides above the ordinary level of the canal all the lock gates are open for a considerable period before high water. Spring tides rise 5ft. to 7ft. above the ordinary level of the tidal portion of the canal, which

extends to the next group of locks at Latchford, a distance of 21 miles.

The total length of the canal is 35½ miles. From Latchford to Manchester (a distance of 14½ miles) the canal is filled with the waters of the Rivers Mersey, Irwell, Bollin and Glazebrook. The canal being designed to take the place of the Rivers Irwell and Mersey from Manchester to Latchford, it thus becomes a canalised river, continuing to be the main drain for Lancashire and Cheshire, large sluices being provided at each set of locks to deal with land floods and surplus water. Owing to the sewage of Manchester, Salford, and all the other towns on the Rivers Irwell and Mersey and their tributaries being allowed to flow into the rivers without purification, the state of the water has become very bad. Salford has now completed a system of intercepting sewers, and is about to purify the sewage at works constructed at Mode Wheel. Sewage works are now being constructed by Manchester, and as the turning of crude sewage into rivers or streams is contrary to the law as well as injurious to health, the other towns above Manchester must take immediate steps to prevent their sewage polluting the canal. Some of them have now got this necessary work in hand.

In the tidal portion of the canal between Eastham and Latchford, 12 miles are inland, and 9 miles on the foreshore or bed of the tideway; on this portion embankments have been formed. Where the foundation is rock or clay, they are formed of clay hearting protected by heavy stonework. The embankments are generally 30ft. wide at the upper surface, with outside slopes of 1½ to 1, and inside slopes of 1 to 1. At Runcorn, where the Mersey is not so wide as lower down the river, instead of an embankment a concrete wall is constructed.

In addition to the locks and sluices at Eastham to allow of the flow of the tide into and out of the estuary portion of the canal, when the tide rises above the ordinary water level, three

weirs, each 600ft. long, are constructed in the embankments. In the embankment opposite the River Weaver, 10 large sluices, each 30ft. wide, have been built to allow of the passage of the Weaver water out of the canal. These sluices are also used for tidal flow. They are on Stoney's patent, working on a movable frame of rollers, and being balanced, they work with great ease, only requiring slight power to lift them.

The River Weaver embankment pens the water up that river to Frodsham, a distance of three miles from the canal, thus forming a large sheet of water available, after dredging, as a dock, for vessels of any size. This large dock is joined to the Weaver Navigation by a lock 229ft. long by 42ft. wide, which admits the salt trade of Cheshire to the Ship Canal. Large locks are built in the embankments at Weston Point and Runcorn, to allow coasters and barges to enter and leave the canal to and from the docks at those points.

The shipping at Ellesmere Port uses the canal and locks to Eastham, this arrangement having been made to avoid the construction of a lock in the embankment at Ellesmere Port as originally proposed.

At Ellesmere Port there is an embankment faced with stone, one mile long, across an embankment of the estuary. On each side of the foot of this embankment close timber piling is driven, consisting of pine piles 13 to 14ins. square and 35ft. long. Over 13,000 of these piles have been driven through sand without any trouble, by the use of the water-jet principle. Four steam-pumps were used, which delivered the water at a pressure of about 30lbs. per square inch through 2in. india-rubber pipes to the pile, where it was attached to a 1½in. wrought iron pipe which was put down under water pressure alongside the pile. With this assistance the steam pile engines quickly drove the pile, which without the disturbance caused by the water-jets in the sand could not be driven.

It was at Ellesmere Port where so much difficulty was found in closing the opening through which the trade of the Port had been carried on during the construction of the canal.

It was first attempted to be done in one tide, between low and high water, but although a great force of men and a large number of previously loaded wagons of stone and earth were used, a failure resulted through a locomotive getting off the line and blocking the work at a critical time. By using staging and bringing up the dam in horizontal layers during several tides the work was successfully accomplished.

The estuary embankments have now stood the tests of several years, with some unusually heavy gales. They are in as perfect condition as when first made, but stronger, as the clay and earth are now thoroughly consolidated.

The canal is excavated throughout its whole length to a minimum width of 120ft. at the bottom, and averages 172ft. wide at water level. The upper portion, from Barton to Manchester, is 170ft. wide at the bottom, and 230ft. at water level. At the various locks the canal is widened out considerably, and will admit of vessels turning, if necessary. The width adopted enables large steamers to pass each other at any part of the canal, and when works are built on the sides of the canal for manufacturing purposes, the canal will be widened out to allow of shipping lying alongside wharves without interfering with the passage of vessels up and down the canal.

At Latchford the locks are two in number, the larger being 600ft. long by 65ft. wide, and the smaller 350ft. long by 45ft. wide. At Irlam, 7½ miles above Latchford, similar locks are constructed as well as at Barton, two miles above Irlam, and at Mode Wheel, 3¼ miles from Barton. These last-named locks form the entrance to the Manchester docks, which extend 1¾ miles above Mode Wheel.

The total rise from the ordinary water level of the canal at Eastham to the docks at Manchester is 60ft. 6in. This rise divided between the four sets of locks gives an average rise of about 15ft. 1½in.

All the lock gates are constructed of green-heart, a very hard wood imported from Demerara, which has been found by experience to be exceedingly durable. Being of wood, they are less liable to damage than those made of iron, being less easily damaged by ships striking them.

The gates are worked by hydraulic power provided at each set of locks, the engines and machinery having been constructed by Messrs. Sir W. G. Armstrong, Mitchell, & Co.

To let off flood and other spare water, sluices on Stoney's patent are provided, similar in size and design to the sluices erected at the mouth of the River Weaver. There are four of these sluices erected by the side of the locks at Mode Wheel and Barton, and five at Irlam. At Latchford, only three are required, as the flood waters of the Mersey also flow down the river channel through Warrington from the point above Latchford, where the canal leaves the river, taking an independent course inland until it enters the Mersey again at Runcorn.

Near Warrington where the railway lines of the London and North-western and Great Western railways cross the canal, they are raised by the construction of high level deviation railways (about 1¼ miles long on each side of the canal) so as to allow of shipping passing under the railway bridges.

The railways between Warrington and Stockport, and the Cheshire Lines Railways near Irlam have similar deviation railways at a high level. The total length of railway deviations constructed is 11¼ miles.

The railway viaducts over the canal are in most cases considerably on the skew, and the clear spans of the openings vary from 266ft. to 137ft., these large spans being necessary to

enable the full navigable width of 120ft. being maintained for the canal under the bridges.

There are two high level road bridges and six swing road bridges between Runcorn and Barton; the span of these bridges is in all cases not less than 120ft. The minimum headway under the high level railway and road bridges is 75 feet.

The swing bridges are worked by hydraulic power, as well as the movable aqueduct, which will enable vessels with fixed masts to pass through the Bridgewater Canal at Barton. This work has two openings of 90ft. each, which are crossed by a long iron caisson resting on a central pier. The caisson is filled with water to the same depth as the Bridgewater Canal, and boats pass along it over the Ship Canal. When vessels on the Ship Canal have masts too high to pass under the caisson it is opened like a swing bridge, the water being retained in the caisson by gates at either end. Similar gates are used at either end of the aqueduct leading to the movable caisson to maintain the water in the Bridgewater Canal.

The docks at Manchester have an area of water space of 114 acres, the area of quay space being 152 acres. The length of quays is 5¼ miles. At Partington the canal is widened out to allow steamers to lie on either side, and branch railways are constructed with hydraulic coal tips to enable either Lancashire or Yorkshire coal to be expeditiously loaded into shipping.

Great credit is due to Messrs. Handyside & Co., of Derby, for the satisfactory way in which they carried out the work of the Barton Swing Aqueduct, which was a difficult work, requiring great accuracy in its various gates. All the hydraulic machinery supplied by Messrs. Sir W. G. Armstrong, Mitchell & Co., including 7½ miles of pipes working at a pressure of 700lbs. to the inch, has proved fully equal to its work, and has sustained their well-known reputation.

When I read a paper on the Ship Canal before the Fourth International Congress of Inland Navigation, held at Manchester in 1890, I stated many of the facts relating to the canal named in this address. I said steamers would be able to navigate day or night, using the electric light. This has proved to be correct, even where vessels have not on board the electric light, which is provided as fixed light at the docks and locks. I, however, named ten hours as the time steamers would require to traverse the canal; the result is, that time is seldom taken, the passage generally averaging seven to eight hours, passenger steamers even taking considerably less time. Messrs. Burns' steamers working between Manchester and Glasgow, have averaged on 236 passages made during the year 1894, only 6 hours 33 minutes—117 passages were made at night.

Most of the members of our Association are Mechanical Engineers, and for details of the machinery employed on the Ship Canal I must refer them to a paper I read before the Institute of Mechanical Engineers, at their meeting at Liverpool in July, 1891. Time will only allow me to repeat some remarks I made at the close of the meeting, which are equally applicable on the present occasion.

"Years ago, before I had the honour of being elected a Member of this Institution, I little thought that in days to come I should have to depend so much upon mechanical appliances in carrying out a great work like the Ship Canal. It was interesting to me as a civil engineer to notice how, in the very commencement of this great work of construction, as well as in carrying it out afterwards, it was necessary to have recourse so largely to mechanical engineering. The Ship Canal, if it had had to depend upon manual labour, would never have been carried out. The mere loss of interest on capital during construction was so great that everything possible had to be done to push the work forward in the most rapid manner. The difficulties encountered were the

very things which it was the engineer's triumph to surmount. Upon this great work every man who had offered himself had been employed; from 16,000 to 17,000 was the largest number ever engaged, but more could have been employed if they had been forthcoming. Therefore, it could not be said in this case that the employment of such a great quantity of machinery had in any way interfered with labour: in fact, but for the machinery, there would have been no employment of labour, because the work could not have been carried out in any reasonable time or at any reasonable cost."

If time allowed I would like to have said something with regard to the modern steam ships and marine engines. The universal adoption of compound engines, enables steamers to convey goods or minerals at a rate below that which is charged by any other system over long distances.

Between the years 1856 and 1872 I carried out large works for the improvement of the Weaver Navigation, with the results that steamers were introduced for carrying purposes, also towing large barges behind them, making up a total weight of 700 tons of salt and upwards. The railways cannot successfully compete for this traffic between Winsford, Northwich and Liverpool; the whole is carried down the Weaver Navigation.

When engineer of the Bridgewater Canal, the Company employed several hundred horses for haulage purposes. It was not possible to ensure regularity in the working of the trade, and the expense was heavy.

I had been told that steam tugs had been tried and failed owing to the canal being too shallow, and not of sufficient width. The Directors agreed that a tug should be tried, and I designed one with a locomotive boiler and one horizontal cylinder engine, speed being got up by using ordinary gearing. I was satisfied for canal work, when tugs have to work day and night, that this system was preferable to direct-acting engines working at high

speed, which was necessary owing to the small diameter of the screw.

The first tug was a complete success, and twenty-four more were constructed without any alteration. The result was the cost of haulage was reduced over 40 per cent.

I can see no reason why Lancashire, so famed for its machine shops, its boiler makers, and its artizans, cannot establish on the banks of the Ship Canal works which should be able to compete with other districts for shipbuilding.

Much has been said and written with regard to the estimates of the canal, and as usual in such cases the strongest statements have been made by those who were least acquainted with the facts.

The original capital of the Company was £10,000,000. The Parliamentary estimate for works and land was £7,292,972; to this must be added £1,780,000, the cost of the Bridgewater Canal and Mersey and Irwell Navigations, including conveyancing and additional works. The balance had to meet the cost of obtaining the Act (which was very heavy after several years' contests), cost of raising the Capital and the payment of Interest during portion of the construction.

The works were let to responsible contractors well within the Parliamentary Estimate of 1885, but, most unfortunately, the plans had to be approved by numerous public bodies and companies who were affected by them. Alterations of the most serious character had to be carried out involving great additional expense, some of which were entirely unnecessary as events have since proved. Great improvements were made in enlarging the area of the docks and putting in locks at Mode Wheel, additional Parliamentary powers being obtained in 1888. Large three-story transit sheds have been constructed at the docks, and many other works have been ordered that were not in the original plans. It is not necessary for me to enter into details,

as Lord Egerton, the Chairman of the Company, went fully into these questions at the half-yearly meetings of the shareholders. Large quantities of land have been purchased in excess of the land estimate, which is a valuable asset if not immediately available. Owing to the unfortunate death of the contractor, Mr. Walker, the Company took over the contracts and the plant, involving a sum of £860,000 that had been advanced upon it, and which by the contract would have been deducted from the payments to the contractor if he had completed the work.

The contractor had no floods during the period he was working, but the Company had to bear the loss of several floods of the most serious character. The cost of repairing damages to works and plant, pumping out water and heavy delay to the work was very large.

The last step was to re-let the works to other contractors, and it is obvious that to complete a work under such circumstances enhanced prices had to be paid.

If the original plans could have been adhered to, as they would have been if outsiders had not had so much control of them, and Mr. Walker had lived to complete his contract, the result to the Company would have been very different. The delay caused by his death entailed the payment of additional interest to the Debenture holders.

The works in the estuary, and indeed at all points, involved considerable contingencies, and there can be no doubt that the ordinary amount of 10 per cent which was added to the estimate for contingencies has proved to be too small, but no engineer could have contemplated that his plans would be so altered, or that the contractor, after doing the part of the work that was most easy, would unfortunately pass away leaving such a legacy of trouble behind him.

Still the canal is completed; the results of the first year has been to prove its efficient working, and I have not lost my faith in its future.

Rome was not built in a day, and it cannot reasonably be expected that, amid the severe competition that has to be encountered, even the energetic management that is now dealing with traffic matters can all at once force from hostile or lukewarm traders the business which must ultimately come to the canal, because no large waterway leading to a great manufacturing district can fail ultimately to obtain the traffic which is due to the advantages it can offer.

VOTE OF THANKS.

Mr. Thomas Daniels (ex-President) said that, as the retiring President, the pleasant duty fell to him of proposing "That the "best thanks of the members be given to Sir Leader Williams for "his interesting address." Their President, he continued, had spoken on a subject which was of infinite importance to all Lancashire men. He was sure that the Manchester merchants ought to be pleased that such a gigantic waterway had been constructed, inasmuch as the reduction in freights would be of immense advantage to them. He had always had in his mind the City of Glasgow, and he certainly envied Glasgow of their splendid waterway. A Mr. Deas (Engineer, Clyde Navigation) had written a valuable work on the Clyde, and he earnestly wished that our local papers would reproduce it. By so doing, Manchester people would see that the Glasgow citizens had themselves made the Clyde navigable, and had not waited for any other company to undertake that task. In 1859 the revenue of the Clyde was £90,816. 17s. 7d., and in 1892 it was £369,226. 6s. 5d., and

the expenditure was in the latter year £328,972. 2s. 7d., leaving a surplus revenue of £40,254. 3s. 10d., so that they could see what an enormous development had taken place between 1859 and 1892. If the Manchester Ship Canal had been made in the "fifties," they could hardly conceive the number of industries which would have been drawn to its banks. From Manchester to Warrington there would have been a continuous line of mills and workshops, the advantage to Manchester of which would have been immeasurable. The canal had not been made to injure railways, but rather to benefit them. If Manchester people built immense machinery, guns, or boilers, without a waterway, it was impossible to transport them. In Glasgow they could put machinery on board for 2s. 9d. per ton, whereas Manchester had to pay 9s. per ton to deliver at Liverpool. This latter fact, together with that of the workmen's wages here being 4s. per week more on the average, readily accounted for the difficulty in competing for work with the Scotchmen.

Mr. Thomas Ashbury (past President) had great pleasure in seconding the resolution. He had been reminded that it was just 14 years since their then President (Mr. E. T. Bellhouse), in his inaugural address, said: "I run the risk of being accused of descending from the sublime to the ridiculous, when I name that the old idea of a ship canal from Liverpool to Manchester is being revived. There is a great variety of opinion on this subject of strong local interest, as there was, no doubt, when it was first proposed to make Glasgow into a great port."* And now, since those few words were uttered, the great scheme has been matured and practically perfected. And he was pleased that, they had as their President that evening, the engineering constructor of that great work, and that he could emphatically assure them of its great success and future

* Transactions, 1881.

prosperity. Many people thought that it should have been constructed earlier, but it should be borne in mind that if that had been done, it undoubtedly would have been made of smaller dimensions, whilst apparently now it was large enough for generations to come.

The motion was carried with acclamation.

The PRESIDENT acknowledged the vote of thanks, and said it was a great satisfaction to him to know that, after twelve month's working, there was no possible doubt as to the canal being an engineering success.

THE ECONOMICAL LIGHTING OF PUBLIC AND PRIVATE BUILDINGS, WORKSHOPS, &c.

READ SATURDAY, 30TH MARCH, 1895,

BY

Mr. J. WEST, M.Inst.C.E.,

(PAST PRESIDENT OF THE ASSOC.)

MANCHESTER.

On Saturday, March 30th, Mr. John West, ex-President of the Gas Institute, and past-President of the Association, read the above paper. The usual meeting room of the Association being lighted by electricity, and all the gas pipes having been removed, it was considered necessary on this occasion to meet in another place, in order to enable Mr. West to illustrate his paper with experiments. The meeting was accordingly held in a large class-room on the ground floor of the Central Board School, Deansgate. The room was brilliantly lighted by gas. From the roof there depended three clusters of incandescent lights, each consisting of six burners, and two powerful lights on the regenerator principle. In the case of each of the three lights a reflector was used, with results which were eminently satisfactory. On the table on the platform from which the address was delivered, there were displayed types of the London argand burner—including the latest of the kind, one made specially for the Preston Gas Company—Sugg and Bray burners of the most approved kinds, an incandescent lamp with globe, an illuminating-power meter, a bar photometer, and numerous other objects of interest.

Mr. T. Daniels presided in the absence of the president, Sir Leader Williams, through indisposition.

The CHAIRMAN remarked that Mr. Joseph Nasmith, in the paper he recently read before the Association on Prepayment Meters, said it looked as if gas were going to die hard, but really the display they saw around them that night seemed to indicate that it was not going to die at all—it looked as if gas were as full of light and fire as ever. If any one knew anything about gas, it was Mr. West, whom he had pleasure in calling upon to address them.

Mr. West said:

At the request of our Council I have prepared a paper on "The Economical Lighting of Public and Private Buildings, Workshops, &c."

It is well known by the faculty that although the use of gas has become general on account of its purity and cheapness for lighting and heating purposes, yet there are but few that use the most efficient and economical means for obtaining the maximum amount of light contained in the gas. Knowing that there is a great loss of money to the community generally through the use of defective appliances, and that the best mode of consuming gas for obtaining efficiently and economically its highest amount of illuminating power is, as yet (by many) very imperfectly understood, I think we shall be carrying out the object of this Association, if we investigate the cause of this loss of illuminating power, and explain the best known principles to regulate and develop the most light from a given quantity of gas, by which means pecuniary and other advantages may be derived. Gas is produced of different qualities throughout the United Kingdom, varying in illuminating power from 12 to 28 candles. In a large number of the provinces in England it ranges from 12 to 15 candles, London 16 candles, and in

Manchester and other gas works nearer the cannel fields it ranges from 15 to 20 candles, and in Scotland where they are close to the cannel seams it is made in some cases as high as 28 candles.

It may naturally be asked how is the relative power of these artificial lights determined? This is done by the use of the science of Photometry, by the well-known law of optics that the intensity of a light diminishes in proportion to the square of the distance from the source of illumination; and the standards of comparison are sperm candles as defined by an Act of Parliament, which states that the gas supplied to any town shall in most cases be tested with an Argand Burner which, when consuming five cubic feet of gas per hour shall give a light equal to 12 or more sperm candles, six of which weigh one pound and burning at the rate of 120 grains per hour. I have been fortunate enough to borrow an old photometer, which will give you an idea of how these experiments are carried out. At one end you have the standard burner and at the other the candles, and between the two lights you see a Bunsen screen or disc of paper greased over part of its surface, so as to render it unequally translucent; this disc is very carefully moved backwards and forward until both sides are equally illuminated, the distance being then measured and squared. The gas is at the same time most accurately measured by a meter similar to the one upon the table, the candles are carefully weighed, the temperature and barometrical pressure also being attended to. By the use of these means (if the operators thoroughly understand their work) accurate results are obtained. There are no less than 22 stations in and around London alone where experts are daily testing the illuminating power and purity of the gas, so as to ascertain if the gas companies are delivering to the consumers gas of the quality prescribed in their Acts of Parliament, and, if not, they are fined for not doing so. I have a return here for a week during the

month of January last, in which the mean illuminating power during this week at each of these stations is above the statutory requirements.

We will now endeavour to show with the apparatus at our disposal the different ways gas is consumed, and we will commence first with the fish-tail or batswing burners that we have fixed upon the Meter, and I now want you to observe that with one and the same quality of gas we are using there is a great difference in the illuminating power ; in the one, you see splendid yellow bands which give forth innumerable rays of light, and in the other, these luminous bands are not so visible, and you will naturally ask what is the cause of the difference in these flames. This is a chemical question, and before I commence my remarks upon Gas Burners it is advisable for me to explain in a simple way the phenomena of combustion. This consists practically of the separation of the elements which form the compound bodies we call gas, and the rearrangement into other compounds totally different from their original constitution. The simplest form of flame is that of a burning candle, and if we consider what occurs when it is burning we shall find in the first place that the tallow or wax is melted by the heat and rises up the wick by the beautiful law of capillary attraction ; when it gets to the centre of the flame the increased heat turns it from a liquid into a gas which is a hydro-carbon, consisting of carbon and hydrogen, in a state of chemical union. If we were to separate this hydro-carbon into its constituents by any means we should find that the hydrogen would remain as a gas, but the carbon would assume a solid form such as soot, lampblack, charcoal, &c. The blue in the interior of this candle is an indication that this part of the flame is in a gaseous state, and if my hand is as steady as it ought to be I shall later on be able to prove this by extracting some of this gas with the tube I have in my hand and light it at the other end.

About 18 years ago, for the purpose of comparison, I obtained a large number of burners that were being used by the ordinary consumers in this city and tested them against several new burners that were obtainable, and found that the loss of illuminating power by the use of the old burners amounted in most cases to over 30 per cent., and I fear from observations I frequently make that, for want of knowledge in many cases, this loss is still going on.

In the distillation of coal for the production of gas there are more than fifty different chemical compounds known to be formed, and probably many more to be discovered. By the various processes of purification, most of these are left behind at the gas-works, and practically there are about nine different compound substances existing in the gas before you. These may, for our present purposes, be classed broadly into two divisions —viz., the light giving and the heat giving portions. Measuring the gas by volume, the light-giving constituents form a very small percentage of the whole bulk, the principal of which is made up of hydrogen—by itself a gas of intense heating power, but containing no illuminants. The next principal proportion of the bulk is a compound of carbon and hydrogen, familiarly known to us as the marsh-damp of coal mines. This compound is the poorest in carbon of any of the combinations of carbon and hydrogen; but, having a little carbon, there may be said to be a very slight luminosity in the flame, though not enough for any practical purpose. The two substances may be said broadly to form more than 80 per cent. of the bulk of the gas, the remaining portions being made up of compounds of carbon and hydrogen—very rich in carbon, to which the illuminating power of the gas is due—and of various diluents in small proportions.

These light-giving compounds, commonly spoken of both as the olefiant series and the hydrocarbon series, consist entirely of carbon and hydrogen in a state of chemical union. Both

these elementary bodies have an affinity for oxygen. There is, however, a greater affinity between oxygen and hydrogen than between carbon and oxygen, so that under certain circumstances it is possible to make the carbon portion of the compound visible to the eye. This may be done by limiting the air supply to a flame, as I did with the Argand burner, so that there was not enough oxygen in the air supplied to satisfy both requirements; consequently, from the greater affinity between oxygen and hydrogen, the hydrogen was severed first, but the carbon, not having the opportunity of combining with oxygen, passes off in a visible smoke, which ultimately settles as a very finely divided powder. You will notice also that with this incomplete combustion the luminosity of the flame is greatly diminished. Another means by which we can, so to speak, condense the carbon into a solid visible form, is by introducing into the flame a chill, such as a cold plate of iron, when we shall soon see the surface of the plate covered with a film of black carbon particles.

Assuming, however, for our purposes, that fairly complete combustion does take place, the following principal chemical changes occur:—The hydrogen and carbon combine distinctly and separately with the oxygen of the air, producing heat, which is a characteristic of combination into which oxygen enters. The hydrogen combines readily with the oxygen of the air, and with it forms watery vapour. The hydrogen having chemically separated from the carbon, the latter is practically forsaken in a minute solid form, in which state it is ultimately carried by the current of issuing gas to the outside edges of the flame, where, it being also able to reach oxygen, it combines with the same to form carbonic acid. Before joining in this last stage, however, these particles of carbon, being subjected to the intense heat produced by the vigorous combination going on between the hydrogen and the oxygen, are changed to white and yellow; and it is to the existence of the great multitude of these

infinitely small particles of carbon, raised to a great heat, that are due the brilliant bands of yellow we notice in our luminous flames. The important part heat plays in promoting the luminosity of gas flames is well exemplified in the extraordinary power of improved burners like those of Messrs. Siemens Bros., Sugg, Wenham, Bray and others.

No doubt most of you are aware that Gas is sent from the Gas Works at varying pressures to meet the different altitudes in the district to be supplied, and this is the reason why the pressure varies on the consumer's premises. It was formerly the universal practice to allow gas to pass at full pressure to the point of ignition, depending upon the pressure for the spreading of the flame; and at one time so little was known on this subject that contracts were made for public lighting, stipulating that the flame should measure a given number of inches across. We are now aware that this practice was decidedly wrong, and that it is necessary to thicken the flame, and regulate the pressure and air supply, in order to get the maximum amount of light contained in the gas. This principle has been worked out in the modern burners, all of which are made with steatite, adamas, porcelain, or other earthenware tips, and have the means, in a greater or less degree, of regulating the flow of gas to the point of ignition.

If air is forced into a flame it destroys its light-giving properties, so, on the other hand, if gas is forced boisterously into the atmosphere you have the like results. It is the different ways in which the gas issues from the various burners which cause the difference in the amount of light. In one case, we have burners which require more pressure to force the gas through the small orifices; in the other case, the gas streams forth gently into the air, and quietly draws to itself the necessary amount of oxygen. In the latter condition we get the most light from the gas. In the standard Argand burner the

gas is allowed to issue from a number of small holes at a very low pressure, and the current and quantity of the air are regulated by the use of the chimney. If the supply of air is not sufficient to combine with the quantity of gas issuing from the burner, the oxygen combines with the hydrogen and such of the carbon as it is equal to. In this case the remaining particles of carbon leave the upper part of the flame in the form of smoke, and it is proved that all burners give their maximum amount of light relatively to the quantity of gas consumed when the flame is just on the point of smoking.

As regards flat-flame burners, the draught or inflow of air upon the flame depends greatly upon the velocity at which the gas issues from the burner; in fact, it is the chief regulator of the air supply. Every flame, by its heat, produces an upward current which draws into its sides the surrounding atmosphere; and the greater the draught made by the flame, the more air is drawn into it, the result being that there is an excess of oxygen which quickly destroys the solid particles of carbon in the gas, instead of allowing them, as in the Argand and proper burners, to remain in a state of suspension for a short time.

Mr. Sugg, who has kindly lent me most of this apparatus, and to whom the public are much indebted, was the first to produce in this country an Argand burner constructed upon scientific principles. He had for years been working in this direction with Dr. Letheby and others, and finally produced his No. 1 Argand, which gave an increase in illuminating power of about two candles over the old Argand. This burner is almost universally adopted as the standard burner, and has been used in most of the official testing stations in England ever since its introduction. He has effected still further improvements in this class of burner, and has likewise very much improved the batswing burners, which he now makes of steatite with hollow tops, at the same time cutting the slits with a circular saw,

which very materially improves the shape of the flame. He also provides a projecting ring round them, to prevent the upward current of the air impinging direct upon the flame. And Mr. Sugg, knowing, from his experience in connection with public lighting, the great advantage of governors, began to add governors with flexible diaphragms to his burners used for domestic purposes. Except for large burners, these large governors were objectionable; but I find it has been met by the adoption of the small metal regulator of the type intoduced into this country, chiefly for public lighting, by Mr. Borradaile; and with these beautiful instruments a steady light is maintained, practically the same amount of gas being consumed under varying pressures. The Christiania and other burners, as you will see, are very handsomely got up in a variety of beautiful designs and patterns, and are of the very best workmanship.

Having briefly explained some of the laws and rules necessary to be observed in the economical consumption of gas, we will now endeavour to demonstrate with the Apparatus at our disposal, and show the difference between the old and defective burners and those of more modern construction.

On this Meter we have burners attached and by the observation of one minute you can ascertain the quantity of gas they will consume per hour. We find that the consumption of a No. 5 fish-tail burner without any obstruction or regulator attached to it (so that any variation in the mains will affect it), varies from 8 cubic feet to 6·5 cubic feet per hour; at the present time it is consuming at the rate of 5 cubic feet per hour, and gives a light only equal to about 12 sperm Candles, and if we increase the pressure I can pass more gas through it without materially increasing the illuminating power. These burners have holes pierced at the top at right angles. The streams of gas issuing through each of these orifices impinge one against the other and produce the shape of the flame. You will note that the

interior of the flame is very blue compared with the batswing burner attached to the same meter, which flame is thicker and more brilliant and is producing a light with the same consumption of gas equal to about 20 Candles with the gas we are now using. In the one case the gas is driven boisterously upwards and more air is drawn into it, which prevents the particles of carbon being sufficiently heated so as to develop the light it contains, while the gas issuing from the other burners is regulated so that the particles of carbon remain in a state of suspension for a short time until they get into a high state of incandescence, hence the increase in the illuminating power.

This Meter shows a similar arrangement, and automatically shows the difference in the illuminating power of the gas by using different burners.

This instrument, which is called "Sugg's Illuminating Power Meter," has been designed by the inventor principally for the purpose of assisting engineers in the examination of coal and other substances suitable for gas-making. It is intended to test the illuminating quality of all gases under similar circumstances, and to show the relative value of these gases.

We now come to the Regenerator kind of burners of Messrs. Siemens, Sugg, Wenham and others. In their arrangement both the air and gas are very highly heated before combustion, the result being that a better light can be obtained with from half to one-third the quantity of gas. according to the size and kind of burners used, than can be obtained from the ordinary burners.

This small lamp that I am using consumes about 3ft. of gas per hour and gives a light equal to 20 Candles, and the larger lamps that you see in the building give considerably more light per foot of gas used than the smaller lamps. These burners with shades are used with great advantage for private residences

fixed near the ceiling for the combined object of giving light and for ventilating the rooms.

INCANDESCENT GAS LIGHTING.

We now come to that form of the incandescent method of gas lighting invented by Dr. Carl Auer von Welsbach; by this system the gas flame is utilized as a heating instead of a lighting medium. The gas is supplied through a special form of atmospheric or Bunsen burner. The flame thus produced is non-illuminant, the object being to raise to a high state of incandescence, the hood or mantle which is suspended over the flame, and which we are told is made from certain minerals found in the higher northern latitudes.

The makers of these burners say that their most recent mantles for use with what they call their C size gas burners give a light of from 18 to 20 candle power per foot of gas consumed, and that they give this light for 1,200 hours without diminution. They also claim that these incandescent C gas burners will give three times more light with half the gas than an Argand Burner.

Having been asked especially to advise you as to the lighting of engineering workshops, I decided to make some experiments with these burners in one of our turning and fitting shops. This shop is 142 feet long, with galleries all round, with a 10 ton travelling crane running from end to end of the same, and for lighting the same it is necessary that the burners should be above the top of the travelling crane, which is 23 feet from the floor. Until recently it was lighted with four gas lights with enamelled reflectors, having eight No. 5 burners in each, partially upon the regenerator principle, and these burners certainly lighted up the centre of the shop, so that we could see to handle things satisfactorily with the crane, but did not give sufficient light for erecting purposes.

AVERAGE RESULTS OF SEVERAL EXPERIMENTS.

Illuminating power of gas as tested last week at Plymouth with the London Standard Argand Burner consuming at the rate of **5** cubic feet per hour.	No. 5 Bray's Fishtail Burners out of cluster of 8 when consuming at the rate of **5** cubic feet per hour tested against the standard burner gave an illuminating power of	C Size Welsbach Incandescent Burner.	
		Tested against the same Standard Burner consuming at the rate of **5** cubic feet per hour, the Incandescent Burner consuming at the rate of **3.2** cubic feet per hour, gave an illuminating power of	Incandescent Burner corrected to standard of **5** cubic feet per hour would give an illuminating power of
Candles. **15.86**	Candles. **12.18**	Candles. **60**	Candles. **93.6**

COMPARISON OF COST OF LIGHTING.

With the old cluster of 8 burners the quantity of gas consumed per hour when tested with a standard meter was **33.47** cubic feet, which would give a total illuminating power of **81.53** CANDLES.	With the new cluster of 6 C size Incandescent burners the quantity of gas consumed per hour when tested with the same standard meter was **18.65** cubic feet, which would give a total illuminating power of **349.7** CANDLES.

Saving in Gas by Incandescent Burner .. .. .. = **44.2** per cent.

Increase in Illuminating Power by Incandescent Burner = **428** per cent.

OLD CLUSTER OF 8 BURNERS.		INCANDESCENT BURNERS—NEW CLUSTER OF 6.	
Cost in pence for lighting for one hour .. .. Gas at 2/6 per 1,000 cubic feet.	d. **100.4**	Cost in pence for lighting for one hour .. .. Gas at 2/6 per 1,000 cubic feet.	d. **0.56**
Cost in pence per candle power per hour	d. **0.0123**	Cost in pence per candle power per hour..	d. **0.0016**
First Cost of cluster of 8 and reflector..	**£1 2 6**	First Cost of cluster of 6 and reflector	**£4 12 2**

We then obtained some of the Incandescent C Gas Burners and fitted six of them in a cluster as close as we could place them and put reflectors over them 4ft. diameter, as shewn on the section on the wall. We have three of these clusters instead of four as formerly, and the light produced has been most gratifying, and we can now do erecting in the centre of the shop without the aid of any other auxiliary lights. We have carefully tested both the old and new burners as to the quantity of gas consumed and the illuminating power, and I herewith append the results (*see pages 36 and 37*), from which you will see that in future we shall only use about half the quantity of gas and get more than double the light.

They also claim for these incandescent burners that you can get the same light with them from 15 to 16 candle gas as you can from 20 candle gas, and I have some proof of this. This being the case the question might be asked, Why make 20 candle power gas where 15 will answer the purpose? My answer to this will be that when the incandescent burners become general, it would be wise for the legislature to reduce the standard, and so enable gas companies and corporations to dispense with cannel and other enrichers, and sell gas at a cheaper rate to the consumers. This system of lighting is very much used on the Continent, and is to be seen in use at all the railway stations from the Dutch frontier to Berlin. It is also making rapid strides in London and other places, both for public and private lighting.

We have 16 of these new burners in our drawing office, being one to each draughtsman, and others in our general office, and we find that the hygienic advantages are very great, and by having suitable shades like the one produced, you reflect a very soft and beautiful light upon the drawing board, and I learn that our draughtsmen and clerks very much appreciate this new system of lighting.

If any of our members would like to see our arrangement of lighting at any time we shall be pleased to see them during lighting hours at our works.

The cost of this system of lighting is very small indeed when compared against electric lighting, as the following calculations will show:—

Incandescent Electric Lighting.

	s.	d.
A 16 candle power lamp in use, 1,000 hours, will absorb 60 units of electricity at 6d. per Board of Trade unit...	30	0

Incandescent Gas Lighting.

An Incandescent Burner consuming three cubic feet of gas per hour or 3,000 cubic feet in 1,000 hours, and giving a light equal to 60 candles or fully three times that of the electric light will cost:—

With gas at Manchester @ 2s. 3d. per 1000.	=	6	9
With gas at Maidstone @ 2s. 4d. ,, ,,	=	7	0
With gas at Plymouth @ 1s. 9d. ,, ,,	=	5	3

As to the general arrangements for lighting public and private buildings I advise that in all cases of general lighting you should hang or fix your chandeliers or pendants in the centre of the building or room, as a great amount of light is absorbed on the walls when brackets are used. In private houses, where the number of burners in use fluctuates very materially, I recommend the attachment of regulators to each burner, and these are now so numerous and cheap that they are within the reach of every consumer.

For large works and factories where, as a rule, the whole of the shops or rooms are lighted simultaneously, a large governor fixed at the outlet of the meter is an advantage, but where the workshops or rooms are very large and at varying levels it is

advisable to have a governor fixed on each floor as shewn on the drawing before you. By these means you can regulate the supply of gas to the burners to a very considerable extent, but to make the light more perfect it is necessary that you should use burners with checks inside them or, what is far better, a small governor to each burner, similar to those before you.

These burners are similiar to those now used on the public lamps, and here it might be well to point out the very great improvements that have been brought about by the use of suitable burners and proper regulators.

When I first came to Manchester 14 years ago the inferior type of burners without regulators were in use, and by order of the Gas Committee I tested a large number of these burners when it was found that a very large proportion of them were only giving half the light contained in the gas, and from that time governors were introduced and universally employed. We now find that in the large Bray and Waddington's lamps with the larger burners we get more light than we obtained from the standard Argand burner—this being on account of burning it in large volumes, which assists in heating the air around the flame, and the particles of carbon are in consequence heated to a higher state of incandescence. I have been told that since the introduction of high power burners, that, taken as a whole, Manchester has become the best lighted city in Europe, and for myself, I may say that I have not seen anything to surpass it.

In conclusion, I hope that I have shewn that the pecuniary and other advantages to be derived when gas is properly consumed are very great, and that what I have laid before you may be of advantage to you individually, and that you will carry out the object of this Association by imparting the information you have received to the community generally, and then the writer of this paper will feel that he has been doubly repaid for the trouble he has taken.

DISCUSSION.

The CHAIRMAN (Mr. Thomas Daniels, ex-President) remarked that he thought Mr. West had demonstrated very clearly that the advocates of gas lighting had for a long time been hiding their light under a bushel. He felt sure that, if they had known as much of the possibilities of gas as many of them now knew, they would not have thought so highly of the electric light. He hoped there would be a good discussion. As they had very good gas at Bury, perhaps Mr. Webb would say something.

Mr. HENRY WEBB said he was very sorry the Chairman had asked him to speak, as it was a subject he did not understand, and therefore could not open the discussion; but he would with the kind permission of Mr. West, ask some questions. He noticed in the paper that different towns used gas varying very much in illuminating power, namely, from 12 to 28 candles. Would Mr. West please say which, in his opinion, was the best and most economical? He, Mr. Webb, had always understood that a low candle power if properly burned was the best and cheapest. Sugg's Christiana burners had been referred to, and the speaker had had these to every jet in his house for several years with success. Would Mr. West say if the diaphram of the regulator should be cleaned, and how often? With regard to incandescent burners, was a pilot light required to each burner? Also, what had been the author's experience of the life of the hoods or mantles? Further, it would be interesting to know if the draught and vibration made by the travelling crane had any effect on these lights? His (Mr. Webb's) experience of incandescent lights had been very unsatisfactory; the mantles had required renewing every month, which was costly. He attributed this to the contraction and

expansion in cooling and re-lighting. They did not seem to fit the burner; currents of air impinged unequally, hence short life. They required very great care in renewing, and could not be left to any ordinary labourer, or in the house to the average domestic servant. In his case the agent had always put them on, but they were not satisfactory.

Mr. W. H. S. Gendall said he had had an incandescent gas light in his office for the past twelve months, and it appeared to be as good now as when first put in. For office work, or for any place where a good light was required, it was unequalled.

Mr. Joseph Nasmith said it seemed to him that this question was resolving itself very rapidly into a question of some type of improved gas burner of the Stott-Thorp type, or, failing that, of the electric light. Because, although the incandescent light was unmistakeably a beautiful light, he thought there was also no doubt that, like all brilliant lights, such, for instance, as the arc electric light, it had the defect of leaving dark corners. In that room, for instance, if they were out of the ambit of the light, they did not get a diffusion which was at all satisfactory. He had tried the incandescent light personally for office work, and his experience was similar to the first speaker. He found that the hoods drew away at the bottom, and that there was a considerable loss of power in the light after a few weeks' work. He might mention that he went into the question as regards school lighting, and he came to the conclusion that if any system of gas lighting was adopted, it must be one which was less intense and in which the light was better diffused. In his opinion that was the secret of the whole question. It was not so much the fact of obtaining a brilliant light as that of a light which would carry and diffuse itself. Some of them would probably remember the experiments which Professor Tyndal carried out as to the relative power of electricity and oil, and

while it was admitted that the intensity of the electric light was very much better than the oil lamps, it was found that the carrying power of the oil lamps, more especially in foggy weather, was much greater than the power of the electric lamps. In a like manner, he contended that a lamp of the Stott-Thorp type, which was substantially a regenerative burner, without all the inconvenience attaching to the form of regenerative lamps which they saw in those present was far more likely, failing the electric light, to give good results than any burner of the incandescent type. To that conclusion he had arrived, although he personally had a decided penchant for the incandescent light. Therefore, it seemed to him that they were tied down to some of their old friends, and that they would not be able to have the incandescent light except for very small rooms, such as the drawing office, where the light was thrown directly over the boards. He found that writing by an oil lamp was much less trying to the eyes than writing by an incandescent lamp. On the point of diffusibility, he might illustrate what he meant by a reference to the Ship Canal, in the construction of which both the electric light and the Wells light were used. In the one case, there was a brilliant white light, and in the other a yellow flare, and he thought it would be admitted that the latter was unmistakeably the better for diffusion, and it had the merit also that it did not cast shadows. Applying that analogy to internal lighting, the light which diffused itself would prove most satisfactory. He did not think it would be wise for gas managers to anchor themselves firmly to the incandescent light, but rather that it would be better for them to see that there was vast room for improvement, and to make efforts in that direction. What he had been saying was borne out by the experience of the electric light It was universally admitted that if a really well-diffused light was required in a room by electricity, the incandescent lamp must be

adopted, as with the arc lamp shadows resulted. Personally, he did not think gas was going to stand its ground in competition with the electric light. Where a brilliant illumination was wanted there were many more things to be taken into consideration than mere first cost. Another point which he thought rather told against the comparative table which Mr. West had submitted, *re* the incandescent light, was that he had not taken into account the large cost of maintenance which almost invariably accompanied the incandescent light, in the mantles and chimneys, &c. In the cases referred to by Mr. West, he should be glad to know if there were any of the shadows thrown already referred to. But, regardless altogether of the question of cost, it would be found that if they could supply a brilliant light like the electric light, people would adopt it.

Mr. E. G. Constantine expressed surprise that none of the electrical members of the Association should have accepted the challenge Mr. West had given them on the question of cost. He did not agree with Mr. Nasmith that people would take a brilliant light irrespective of cost. He thought the greater cost must always militate against the electric light supplanting gas, except where the lighting was on a considerable scale. With regard to the Welsbach light, he certainly thought from Mr. West's remarks that the fortunes of that light were made, but the perishing of the mantles appeared to be an important addition to the cost of maintenance. At the same time, if they could obtain at such a small cost, as compared with the ordinary gas burner, the advantages indicated by Mr. West, it would be obviously to the advantage of everybody to adopt the Welsbach light, if it could be done minus the heavy maintenance cost. As to the diffusion of the light, he thought that depended very largely on the form and material of the reflector. If the reflector was of proper material, sufficiently large, and placed at a suit-

able angle, the difficulty as to diffusion would be met to a great extent.

Mr. Samuel Dixon said if they really could get a good illuminating power from a poorer gas, they would be able to solve one of the great social questions. If such a thing could be done they would be able to supply it cheaply to manufacturers, and thus dispense with those wretched long chimneys, which made our public buildings so grimy. It would be surprising to those present to learn, after Mr. West's description of the fine burners, that the common burners sold just as well to-day as ever they did for the past fifty years. Twenty years ago it was thought that such burners were going out, but his firm still made them by the thousand gross, and they were sent to all parts of the world, particularly America. They were used more in connection with gas stoves, heating arragements, &c.

Mr. John Schofield observed that he quite agreed with the remarks made regarding the incandescent light. He had had some experience with them, and found that the mantles caused considerable trouble. Certainly they did not last more than a month, and, generally speaking, he did not think the incandescent light was one that could be put in the hands of an ordinary workman. As regards its supposed greater hygienity, he could not think it was any more healthy in a living-room than the ordinary gas burner. It might produce less impure air, or distribute less carbon, but that was not the worst part of the gases so far as the persons in the room were concerned. In his opinion, in order to light any ordinary room, or workshop room, an intense light was not necessarily required. For calico printing, and works where fancy goods had to be dealt with, the colour of the incandescent light would not do; for general works there they wanted not so much a brilliant light as a light distributed over the whole surface of the place. He thought the

word distribution was a misleading term regarding lighting, and that the word penetration was more appropriate. He was certainly of opinion that the light from an incandescent burner was not nearly so well diffused nor so penetrating as that from an ordinary Bray burner.

Mr. R. J. H. Sayers said that since Christmas they had had a number of the incandescent lights in the drawing office, and up to the present time it had been unnecessary to renew any of the mantles. It might be stated that the first few mantles that were tried before Christmas got damaged through the breaking of the chimney-glasses, but this difficulty had been overcome by the introduction of mica chimneys supplied by the Incandescent Company, and they gave every satisfaction where ordinary care was exercised. When the drawing office was lighted by ordinary argand burners, the heat evolved caused the office to be very oppressive to the draughtsmen, and it became almost unbearable when heavy fogs lasted the whole day, notwithstanding the effect of ventilators fitted to every window. The incandescent burner had made a great difference to the comfort of the draughtsmen, and was a great improvement for this reason alone, apart from the better illumination.

Mr. F. W. Reed said he had had one of the incandescent gas burners working for about four months, for say six hours per day, for reading and writing purposes. A pink-tinted chimney and globe were used, which did away with the irritating rays referred to. During the time the burners had been working he had not had any trouble with the mantle. It seemed to be in good order, and he hoped to have another four months work out of it.

Mr. E. J. Duff thought the Welsbach light was a great improvement on the old burner.

Mr. ALFRED SAXON said the great objection to gas was its want of cleanliness. There was no doubt that the ceilings and everything about a house got dirtier with gas than with the electric light. But Mr. West's paper certainly seemed to indicate that there was abundant room for economy in the use of gas.

On the motion of Mr. T. ASHBURY, seconded by the CHAIRMAN, a cordial vote of thanks was passed by acclamation to Mr. West for his interesting paper.

Mr. WEST, in reply to the various remarks, said the question put by Mr. Webb as to the most suitable gas to supply to the public was a difficult one. The reason a higher quality of gas was supplied in Scotland was that there was an abundance of cannel near at hand; but his own view was that the people of Scotland would be much better served with gas of a much poorer quality. Glasgow, Edinburgh, and other Scottish cities were the worst-lighted cities in the country. The gas was too good for them to burn in small quantities efficiently and economically. Most of the public lamps were allowed to consume only 2 or 2¼ cubic feet of gas, whereas in England, with 15-candle gas, 5 cubic feet were allowed, or double the quantity. The 2¼ cubic feet of cannel gas as it issued from the burner was so thin that the particles of carbon from which the light was derived passed away imperfectly consumed. He feared there were more smoky ceilings in Scotland than in England. But, from one point of view, black ceilings were really a credit to gas managers, because the nearer you got the gas to the point of smoking as it was being consumed, the better was the light. For commercial purposes he thought 15 to 16-candle gas was the best, and if the incandescent burners should come to be adopted universally, it would, no doubt, be of advantage to use a poorer gas, for with the incandescent burners

as much light could be got out of 15 as out of 20-candle gas. As to the current of air caused by a travelling crane affecting the incandescent lights, there was a little vibration, but he thought it did not affect the light in any way. Previous to the introduction of the incandescent lights into the workshop of his firm, the shop was lighted with the Stott-Thorp burners, of which Mr. Nasmith spoke so highly; they had four clusters of them in the shop, and they could just see to pick up things, and to get about fairly well. Those four clusters were, in November last, displaced by three clusters of incandescent lamps, and the reflector was placed at such an angle as to prevent shadows coming along the centre of the shop, although, of course, with reflectors you would have shadows in the corners. What they wanted was a light to erect by in the centre of the shop, and they had secured it for half the money they were previously paying, besides getting four times the light; there could be no question about this fact. He had been asked whether they had any pilot lights. They had not. Only four of the mantles had been broken during the four or five months the new lamps had been in use, and he believed that the breakages all took place during the first two or three days. After Mr. Jenkins, his manager, had given instructions as to how the lamps were to be handled, there was no trouble on that score. He might say on that point that the agents for the lamp at Plymouth made it a condition that they should put the burners and mantles on themselves, in order that the character of the burner might not be jeopardised by inefficient adjustment. With proper care the destruction of the mantles, made as they now were, need not be a very great item, and in his comparative figures he had made no allowance for it, because he thought the cost of the renewal of the electric lamps would probably counterbalance it. There was, no doubt, a great deal in what had been said on the question of diffusion, and he would not like to say that the

incandescent gas burner diffused the light as well as the argand burner—in fact he did not think it did. He had simply tested the incandescent light for its illuminating power. Mr. Nasmith spoke of the effect of the light on the eyes, but that difficulty might be overcome by the use of suitable globes. In their drawing offices, which were formerly lighted with argand burners, they found that the light was much better, and that the atmosphere was cooler than it was before. As to the hygienic advantages, it stood to reason that if less gas was consumed there would be less oxygen used up, and consequently there would be so much less carbonic acid. As to gas *versus* electricity, he had made many statements on the question of cost, now and on previous occasions, and not one of them had been answered. He invited any electrician present to come to the bar of justice—in other words, to the bar photometer. Was there any electrician present who would say that an electric lamp that they called 16 candles gave a light equal to that of the 16-candle argand burner before him? Formerly, the electricians used to say that one of their lamps gave a light of 8-candle power, and then, without rhyme or reason, they declared that the same lamp was a 16-candle lamp. He thanked them for their attention to his remarks, and would feel amply rewarded if anything he had said led to a fuller appreciation of the possibilities of gas as an illuminant.

The meeting then closed.

ELECTRICITY AS THE FUTURE MOTIVE POWER IN THE TEXTILE INDUSTRIES.

By Mr. G. H. Firth and Mr. D. Selby-Bigge.

READ SATURDAY, 26th JANUARY, 1895,

BY

MR. G. H. FIRTH.

In considering the industrial requirements of the present day, amongst other essential features, there is nothing of more importance in our various manufacturing concerns than the vital question of the transmission of power.

Competition is now so keen in our varied industries and markets that manufacturers can ill afford to ignore any means whereby the cost of their productions can be reduced to a still lower limit, which will enable them to further maintain a position in the market with a reasonable chance of a profitable return.

In arranging new premises for the carrying on of any industry, it is comparatively easy to carry out whatever modifications and improvements experience may suggest, the designer then having a clear field for the play of his ideas. But, in the re-organizing of old systems, the designer has not this advantage, because the sites being pitched beforehand, conditions most unfavourable at times bar the way to the application of the most approved methods and ideas, and the designer is put fairly on his merits to evolve something like a satisfactory result from his efforts and the materials at his disposal.

Experience, of course, is the great factor in this as in most other matters, and in designing buildings for industrial and

manufacturing purposes at the present day, it is oftener a question of judicious remodelling of works already in existence, than one of commencing on an entirely new site; therefore, whatever conduces to the general improvement and a better arrangement on economical lines, of methods hitherto commonly in vogue in our industrial systems, should be welcomed by all who are concerned in these matters, and this is our apology for introducing the subject of this paper here this evening.

Mechanical power is now obtained and distributed in a variety of ways. In days gone by wind-mills and water-wheels were the two main servitors that were utilised and pressed into the service of man to furnish him with necessary motive power. Later on, came the turbine which to this day has no more economical compeer in the production of motive power where the necessary conditions are available for its use. Needless to say, it was in former times almost invariably the chief consideration, that of an abundant water supply, which determined the site on which a factory should be situated. It is even yet a main consideration, but not so indispensable a one owing to the advantage derived from the use of efficient pumps, artesian wells, &c., and also, as will be seen later on, by the facility with which pumping operations may be conducted from a distance.

It was reserved for the steam engine, however, and an apparently unlimited supply of coal, to give that fillip to commercial enterprise which has transformed the world from a comfortable jogging pace into the almost unbearable strain of an artificial and unnatural race for existence, luxury and wealth.

Additional prime movers have since appeared in the shape of gas and oil engines, &c., but they all, without exception, require considerable auxiliaries for the transmission and distribution of their energies to the innumerable variety of needs and duties throughout the factories and workshops where they are employed.

We are thus brought face to face with this subject of transmission of power, and we hope to show the importance of it, and the attention of which it is deserving, as we proceed further.

Engines and boilers may be up-to-date and doing well, and the power generated being obtained with all due considerations of economy; the machinery may all be first-rate, and the best of the kind obtainable; and yet the transmitting mechanism may, owing to various causes, and principally, perhaps, to its often necessarily complex ramifications, be absorbing a very large amount of the power given off by the prime mover. When we consider how small a margin there often is between a profit and loss account in working, we can easily see how the exercise of a little more economy in only this one direction may suffice to turn the scale and make the otherwise adverse balance a favourable one.

The principal methods of transmitting power until quite recently were by means of shafting, wheel-gear, belting, and ropes. These were generally considered to be, and justly so, the best means of distribution according as individual ideas, or circumstances necessitated the adoption of one or other of these methods in order to bring the available power directly into use on the machinery as desired.

Undoubtedly these methods have served their day and generation faithfully and well in the past, and even at the present time, no doubt, in some cases must continue to do so; yet, when we take into account the many objectionable features more or less unavoidably connected with these systems, one cannot wonder that the day may come, and in the opinion of many has come, when even these, good servants, as they have proved themselves, must yield place to a more active, direct, and efficient servitor, to minister to the wants of ever pressing needs and relentless demands.

Economy is the watchword, and *Friction* is the foe.

In transmitting power through shafting, the first considerations are power and distance, or, in other words, a sufficiency of strength and by the shortest route. According as the power required be great or small, or the distance far or near, so will be the section and weight of the shafting employed, and as a consequence the first cost and then the maintenance will be approximately in proportion. The shafting must then have its bearings, the cost and maintenance of which must be considered, to which must be added the cost of renewals through wear and tear, deficient lubrication, or excessive duty. As it passes from one department to another the shafting has to be diverted and directed into different ways and courses to suit the convenience of the designer or to accommodate itself to whatever conditions happen to be met with, and this is where the trouble largely increases. In doing this, we have to adopt various methods of gearing to suit the new requirements, which means additional weight on the bearings. Then the shafting again has to bear its complement of couplings and driving pulleys for imparting motion to the different machines on its way, to which of course must be added the weight of the various belts or ropes used for the purposes of distribution. Added to this, is the speed at which this dead weight has to be driven, and as, generally speaking, the speed increases as the distribution proceeds and power is required a further remove from the prime mover, there is often a very great amount of vibration and disalignment, which may possibly account for that mysterious variation in the power required to drive machinery which otherwise seems to be practically working under precisely or very similar conditions.

Gear wheels, by their weight, bad forms of teeth, indifferent setting and unskilful proportions, may often impose an unnecessary waste of power to drive them. In the very best class of toothed gear a considerable amount of power may be lost by the conversion of the rolling motion of the teeth into a more or

less rubbing one for want of efficient lubrication; also, according to the conditions, more or less backlash may take place through the gear over-running the fly-wheel, causing considerable "whipping" of the lighter portions of the shafting. Another cause affecting the gearing, where the necks or collars are unskilfully arranged, is the expansion and contraction of the shafts by variations of temperature, and this cause alone, if not remedied, will in course of time suffice not only to absorb power, but will have the effect of causing very serious dislocation in the structure of the building.

Belting and ropes, besides being so much dead weight of themselves, are only effective so long as there is sufficient tension or pressure on the surfaces in contact with the drums or pulleys to overcome slipping when transmitting power, from which cause a heavy initial pressure is put upon the bearings to begin with, and which pressure is considerably increased when the weight of the working load is added, and more especially while the inertia of the mechanism is being overcome every time it is started.

It may be of interest at this point to note the following practical experiment, from a paper read by M. Fauquier, before a continental Society of Engineers, on the "Stiffness of Hemp Ropes and Leather Belting," in which he describes an engine making 96 revolutions per minute, and transmitting 216 indicated HP by means of, in one case six ropes of $1\frac{9}{16}$ inches diameter, and in another case by a double leather belt $19\frac{3}{4}$ inches in width. The pulley on the engine shaft was 18 feet in diameter, and the one on the counter shaft was $34\frac{1}{4}$ inches in diameter. It was found that 11·6 HP, or 5·37 % was lost by cable transmission, and 7·8 HP, or 3·6 % in transmission by belt. As the result in the case of the ropes was considered unsatisfactory, the maker of the ropes suggested as a remedy, that larger ropes $2\frac{5}{32}$ inches in diameter should be used. This being done the

result was that instead of the loss of power being 11·6 it rose to 23·5 HP, or 10·8 %; exactly double what it was before.

It has been the practice with engines of large power to indicate them with all their weight on in the first instance, then indicate again with nothing on but the transmitting mechanism, deducting the latter from the former, and considering the remainder as useful available power.

As has been remarked previously, adding more weight to the load increases the pressure on the bearings and gear, thereby causing an increase in the friction of the parts. This is easily realized by any one familiar with the sound of wheel gear when in motion. The wheels emit a peculiar sound when running light, and you know instinctively they are running light; let the weight come on and the sound is totally different; suppose weight to be added until the wheels are overdone, and the horrid grind very soon convinces you that something is amiss, and that you may prepare for repairs at no very distant date.

From what we have now said it will appear that in considering the losses from friction, we must not only deduct the friction of the transmitting mechanism when the engine is running light, and which is a constant quantity, but we must also take account of another quantity, which is necessarily a variable one, and that is the additional friction of transmitting mechanism when the working load is on. From indications taken on a highly efficient system it was found that from an efficiency showing 80 % in the ordinary way another 12 to 15 % had to be deducted, making the actual efficiency about 67 %, and we have no hesitation in saying that efficiencies now showing 60, 70, or 80 % would be found on investigation to be less by from 15 to 30 % or even more, could the results be obtainable with accuracy. But here we are confronted with a difficulty; these results are not easily obtainable with accuracy, more especially in systems of large magnitude, and we only know of two means whereby

this end can be attained accurately. These are, first, by the use of the dynamometer on each machine or group of machines, and second, by temporarily driving the machines separately by electric-motor; the sum of the results, of course, in either case giving the total amount of useful power absorbed by the machinery, and this result deducted from the total of the indications of the engines with everything on will give the total power absorbed by the friction of the transmitting mechanism. These methods, however, are both exceedingly inconvenient in the majority of cases, and costly; two considerations which require careful attention nowadays.

It is almost bewildering to struggle through the figures and tabulated results of experiments on friction. Like the stars of heaven they vary in magnitude and number, and it is with a sense of relief that we turn to the plain, unvarnished statements of a writer like Prof. Perry, who tells us there is a general law in machinery, which is that "friction is proportional to load," and "always tends to resist motion." And again, "the power usefully given out by a machine is a certain fixed fraction of the total power given to the machine, minus the power required to drive that machine when it is unloaded." Also, speaking of a shaft when transmitting power, he says, "experiment shows that the energy lost in friction for a certain amount of motion increases proportionately with the energy actually transmitted by the shaft." From which it would appear that whether we increase the load or increase the speed there is a proportionate rise in the loss by friction.

Prof. Perry also found by experiments on the friction of machines a law as follows:—Total power = useful power $\times$ (x) + power required to drive machine at same speed when unloaded, x being a variant in the equation.

This law is not therefore of *universal* application, but *varies* with every particular machine, and may be better expressed

thus:—Total power = $a + b \times$ useful power, when a and b are *some* numbers. For example, b is about 4 or 5 on a screw-jack. It is about 1·02 on a very good hydraulic lift. It is about 1·2 in a steam engine. a = unloaded friction.

Hirn, in a report on his experiments on friction says "that the power absorbed by cotton machinery can vary from 65 to 100 HP according to the more or less judicious combinations of the frictional parts and to the quality of the lubricating material used." He further considers "that a possible reduction of 85 % on the motive power consumed by an establishment gives to the study of the considerations on which this reduction is based all the importance of an economical question of the first order."

The Institute of Mechanical Engineers, in their experiments on the friction of shafting, found at the time that "all the common methods of lubrication were so irregular in their action that the friction of a bearing often varied considerably." That "friction was greatest with a new brass, and diminished as the brass became worn, so as to fit the journal more perfectly." Also, that "the friction depends on the quantity and uniformity of distribution of the oil, and may be anything between the oil-bath and seizing, according to the perfection or imperfection of the lubrication."

Professor Goodman, in a paper* read before this Association, said: "Out of every ton of fuel consumed for engine purposes, some 400lbs. to 800lbs. are wasted in overcoming the friction of the working parts of the motor; and further, every machine driven by that motor also wastes a large percentage of the remaining power by its own friction. One would not be far short of the mark in saying that from 40 to 80 % of the fuel is consumed in overcoming friction."

From the foregoing strictures it will be seen how justifiable and well-founded are the considerations, from economical and

*Transactions, 1890.

commercial points of view, which incite us to an organized and systematic attack on this "mechanical octopus." It will also be seen how very difficult a matter it is to determine, with anything akin to accuracy, the amount of loss sustained in the mechanical transmission of power from this one factor of friction alone. We have found it in our own experience to vary from 20 to 70 % of the transmitted power, according to the various conditions under which the mechanism was employed.

There are other losses allied to this one of friction, which will readily occur to most of you when giving this matter your critical attention.

There is yet another prevalent source of loss in the transmission of power which we should like to notice before leaving this part of our subject, and that is its distribution by means of separate engines. For this purpose long lengths of piping are required, which convey steam of diminishing pressure as it goes along to apparently innumerable steam engines scattered about in various places, some perhaps driving their own little complement of shafting and gearing, some driving special machinery alone, but all of them warming up or cooling down again through the more or less intermittent nature of their employment, thereby entailing losses by condensation and radiation, and, as a consequence, a very heavy and almost incalculable expenditure of coal, to which of course must be added boiler-power and its upkeep.

As bearing on the above, Mr. Richardson, in a recent address to the North-East Coast Institute of Engineers and Shipbuilders, giving some results of experiments on works of a similar character, said: "The wasteful effect of this system of driving is shown by the consumption of steam, which averages 50·9lbs. per indicated HP per hour, and to this has to be added the condensation in the steam pipes, which is 7 %, bringing the total up to about 55lbs. of steam per indicated HP per hour."

Enough has now been said to enable anyone gifted with ordinary intellectual faculties to see that there is still ample room for economy in one branch at least of mechanical art, and yet, strange to say, in the face of evidence such as we have now given, one occasionally meets with men who complacently close their eyes, ears, and the argument, by the consoling remark that "the subject is not yet ripe enough for consideration."

The question now before us is, What is the remedy for all this waste? And we answer, Electricity. When we consider the enormous saving that must be effected by the use of a medium that has all the energy and an exceedingly low percentage of loss as compared with mechanical transmissions, we cannot be surprised at the rapid progress that this medium is now making in our industrial centres. More especially is this the case where the motive power is distributed from a central source to various more or less widely divergent points of application. As a proof of its feasibility, utility, and popularity, we have only to look at the ever increasing number of papers, lectures, and technical publications, as well as to its continually extending application to practical uses, to become convinced that to a very great extent, this is the power of the future.

So far as we are at present able to say the most economical method of transmitting power by electricity, is to have a central generating station from which wires are led off to other distributing centres, and from these points the current is led off to the various motors which are attached as closely as possible up to the point of application of the energy in a machine. Being unable as yet to get our energy in a more direct way than by means of water, gas, or steam power, our generating station is so far nothing more than the usual steam engine and boiler, or other motor, with which we are already so familiar. There is one great difference, however, not to be lost sight of, and that is, in the electrical system we usually couple up direct on to the

crank shaft of the engine, which enables us to run at a speed usually only attained on our second or third motion shafts in the ordinary way, whereby we are enabled to use lighter engines at much less first cost for the power generated, and also a considerable saving in space occupied.

The advantages of this system become at once manifest when we remember what has been said in the earlier part of the paper with regard to mechanical transmission. There is a total absence of unwieldy shafting, gearing, and fixings, with their attendant careful allignment, adjustment and maintenance, and in the arrangement of which the engineer is bound to follow certain fixed methods and courses, and has not therefore an altogether free hand in the matter. And we have in place of these, cables and wires which are flexible, practically everlasting, easily manipulated, and through which there is very little appreciable loss in the transmission of energy, occupying very little room, costing nothing for maintenance, and whose value as a material does not deteriorate with time.

It is not claimed here for this system that there is no loss entailed by its use, because there are certain losses in the generating dynamo to begin with, a slight loss through the cables, and other losses in the motors at the points of application. These losses are variable, and like the steam engine are greater with small powers than with large. A generating dynamo approximating in efficiency a good steam engine, and very often surpassing it; a good dynamo giving an efficiency as high as 90 %, and at times considerably more. An electric system can often be arranged whereby an efficiency of 75 to 80 % may be realized, whereas with mechanical transmission the same could only be got with an efficiency of 25 to 30 %, or even less.

Another great consideration is the regularity of speed of the electric motor; it is not so very dependent on the speed of the

engine for this, as it is self-regulating, and has therefore a very great advantage in this respect. It may be worked intermittently much more economically than the steam engine, because, the generator being self-regulating as well as the motor, when the demand for power ceases the generation ceases, and therefore there is no wasteful running of mechanism uselessly.

The greatest drawback to the use of this medium is its first cost, and this unfortunately increases with the magnitude of the installation. For the purpose of comparison we have assumed that the shafting, gearing and fixings, &c., necessary for the mechanical transmission of power will average about £5 per indicated HP required, not including the engines. The cost for electric driving would come out at an average nearer £15 per indicated HP, not including the engines. This would be for moderate powers up to about 500 or 600 HP. For very large powers the cost becomes excessive, owing to the multiplicity of parts and the necessity of dividing the generation amongst a number of machines.

The simplest method of driving by electric motor is to find some convenient place on a shaft, fix the motor on the ground, and drive by means of a belt on to the shaft above. This has been adopted very successfully in the case of sheds where there are numerous parallel lengths of shafting, such as weaving sheds and the like, and answers exceedingly well, when it is most convenient for machinery to be driven in groups. When it is required to drive individual machines the problem becomes more difficult, and it is absolutely necessary that in order to obtain the best results, there should be a fusion of mechanical and electrical skill, because so much depends on the method of application of a motor to the machine for its successful working. Badly arranged and improperly formed gearing, jars, sudden shocks, and continued vibrations are inimical to good motor work at any time, but particularly so where there are inflexible

connections, such as rollers with the motors directly coupled on to the shaft, or with positive spur-gear and sudden and heavy intermittent loads. It is for the mechanic to say whether a friction, or a spur, or a worm, or a direct drive is the most suitable for any individual case, and for the electrician then to arrange his motor accordingly. In the writer's opinion motor builders should make their spindles as short as permissible between bearings, and avoid either an overhanging drive or a drive with the pulley or pinion next to the armature without the intervention of a bearing, and also make the spindle stiffer than they usually do, thereby preventing sparking, broken connections, &c.

It is not always advisable to get as close in as possible to the machine it is desired to drive. Take the case of a mule for instance. The best form of drive is to incorporate the motor with the countershaft, and then drive down in the usual way with belts. Anyone familiar with the sudden changes and variability of the load on the rim shaft will probably see the wisdom of this course. In a cardroom it would be best to drive the line shaft. In the case of preparing machinery, generally speaking it would perhaps be better to drive the machines individually. In spinning frames the best plan at present would probably be to drive with separate motors at each cylinder end, except where there are double cylinders, then one would be sufficient for both. Many spinners affect a long, sagging drive by belting over guide pulleys; their tastes could be accommodated by driving the line shaft electrically. The writer has known people advocate the driving of every individual spindle by its own motor, and this is probably feasible enough, only the spindles, though maintaining a regular high speed, would not be all running at a uniform speed, as it is impossible to turn out motors in quantity all exactly alike in this respect; it would be something like trying to get a number of clocks to

tick together in unison. Still, the experiment is worth trying by anyone with money and courage enough.

Enough has now been said to show the means whereby, in the majority, though perhaps not all, of our textile industries, a great economy over present methods of using power may be effected, and the future alone will disclose to what extent we shall have profited by the adoption of this, the latest development in industrial progress.

ELECTRICITY AS THE FUTURE MOTIVE POWER IN THE TEXTILE INDUSTRIES.

BY

Mr. D. SELBY-BIGGE.

The question of the application of electricity in a practical manner to the textile industries is one which no doubt will in the very near future receive considerable attention at the hands of engineers and machinists generally, but so far comparatively little has been attempted or done to develop this branch of electric power work.

The author trusts that the few notes he has the privilege of submitting to this meeting of the Manchester Association of Engineers may be the means of provoking a thorough discussion of the subject, so that in the end all interested may be the gainers thereby.

The first question which will be posed is what advantages will accrue from the electric system of driving over existing

methods. Mr. Firth has already in the previous part of this paper dealt with the mechanical shortcomings in the transmission of power, so we will now examine the conditions under which electricity can be generated and transmitted for the purpose of driving a cotton mill. Of course, in those cases where large water powers are available, the mill may be driven with economy in a manner which has already been successfully adopted in America, viz., by means of motors geared, or driving by belt on to the various line shafts throughout the mill, although the turbine generator itself may be situated many miles distant.

In such cases the most important point to consider is the capital expenditure which will be involved in the necessary conductors between the generating source and the mill. It is of course necessary that this expenditure should be kept as low as possible.

In order to transmit electricity long distances with economy, many arrangements have recently been devised. Copper has been found as a rule to be the most suitable medium for conducting purposes, but the section must be kept down on account of the cost. The voltage or pressure has therefore to be raised. This, with direct or continuous currents has a limit owing to the difficulties in construction of dynamos and motors of high potential. In a transmission of power plant in South Africa, the author believes that 3,000 volts has been adopted for continuous current machinery, but he would hardly deem it advisable to attempt anything higher than this. With alternating currents, however, machinery may with safety be constructed up to very high voltages, such as 15,000 or 20,000 volts, and in this manner the sectional area of the conducting cables can be reduced to a minimum. The potential can be brought down at the mill by means of transformers to any desired voltage.

The application of alternating and polyphase motors has found favour and been adopted, especially in Switzerland, and also to a certain extent in America, but little has as yet been done at home in this direction. At first, difficulties arose in getting the motors to start up against heavy loads, but these have now been overcome. In a long distance transmission plant from a water power to a mill, the methods of transmission briefly referred to above should all be examined. A transformer and switch room should be built or arranged for at the mill from which all the line shaft motors and lighting circuits would be controlled.

Under conditions such as the above, and where a good reliable water power exists within a reasonable distance, the method of line shaft driving by electric motors will be found to be an economical and advantageous one, but in the English mill district unutilised water powers of importance are few and far between, and one will be almost always brought face to face with steam power. Now, perhaps, of all places on the face of the globe, Lancashire is the one where the greatest attention has been paid to steam economy, and the author feels that in coming to Lancashire he is verily "bearding the lion in his den."

Owing to the keen competition in the cotton industries, the unit of fuel has gradually been brought down to a very low point, and it is hard indeed to see how any further improvement can be effected with the present methods for transmitting and distributing the power. The coal consumptian has been reduced from 1½lbs. to 1¼lbs. per indicated HP per hour, and in some cases even below this. One must not look therefore to the engine for further economy, as we may assume that whether in electrical or mechanical transmission the steam efficiency of the engine will be the same, but to the means whereby at present the power is transmitted and distributed to the

machinery in the mill, and also to the mechanical means employed in the machinery itself for increasing or reducing the speed.

These are the points to which we may reasonably look for further improvement.

In this part of the country, gearing, belting, pulleys and shafting have been brought to a high state of perfection, and it is not by improving on these that the author looks for the saving, but by the simple, yet radical change, of abolishing them altogether.

Except in special cases, such as mills which can be driven electrically from turbine dynamos, or where mills are driven by several steam engines situated in different parts of the mill, the system of line shaft driving will hardly offer sufficient inducement in the way of saving to authorise the complete remodelling of the mill for electric driving; one must therefore make a fresh start, taking the case of an absolutely new mill.

Most of the gentlemen present, will probably agree with the author that a complete absence of all that enormous moving mass of belting, main shafting and counter-shafting, with their attendant pulleys and gear-wheels, would be the means of effecting not only a saving in the initial driving power required, but also would greatly minimise the heavy annual upkeep throughout the mill.

The upkeep of an electric power installation throughout a mill could certainly be taken as not exceeding 5 % on the capital outlay, and judging from the actual sums paid for maintenance on a number of power installations, the author thinks that in reality this figure would in practice not exceed 3 %.

The question next arises as to whether there are any great difficulties to prevent us from driving textile machinery electrically. There is absolutely no difficulty whatsoever which,

with an ordinary amount of patience and perseverance, cannot be overcome.

Such machines as carding engines, scutchers, blowers, roving and intermediate frames, &c., &c., can all be driven electrically by motors embodied as part of the machines themselves, or in the case of machinery absorbing very little power and running constantly, groups can be formed driven off one motor.

The most important application in the mill is that of the electric motor to the mule, and on account of the great variations in power between running up and drawing out, there is no application to which electricity is more suitable from an economical point of view. On account of the present complicated construction of the headstock and the great necessity for small space, difficulties offer themselves to the introduction of the motor into the headstock, and failing a possible modification in the actual construction of the mule, owing to the high speed of the motor, this could be placed directly above each mule on the ceiling, the motor being of the inverted and enclosed type, and provided with the necessary arrangements for meeting the conditions of the very varying load.

A friend of the author's (Mr. J. P. Bedson), who has recently shown great pluck and determination in the erection of his new wire mills at Middlesbrough, which are driven throughout by electricity, and comprise many novel departures, has often told him that had he not his hands full with his own undertaking, he would have dearly loved to have tackled a spinning mill, and driven it electrically.

Electric power applications grow on one gradually, and one does not see through their economies at first sight.

Owing to the absence of belting and shafting, the construction of the mill might be considerably altered and cheapened, but this is more a matter for the architect to decide.

Mr. Firth has already alluded to the loaded as against the light frictional loss in a mill. This is a most important point in considering the present efficiency of mill working, and it is one of those fine points on which electrical transmission shows such superiority over mechanical methods. Through the kindness of Messrs. Dronsfield & McAllister, Mr. Firth was enabled to take a large number of diagrams and tests to determine this loaded frictional loss.

One thing in connection with electrical transmission is the great sensitiveness of the system; every variation in every machine and motor is simultaneously reproduced in the generating dynamo, and the most perfect proportion between work expended and the horse-power indicated on the engine is established.

The question of the form of generating plant to employ is an important one. The author would suggest as power generators for mill driving either the type in vogue on the Continent of combined Corliss engines and multipolar fly-wheel dynamos, running at a speed of say 80 revolutions per minute, or else generating plants consisting of direct coupled triple or quadruple expansion condensing engines and multipolar dynamos, running at 160 revolutions per minute; the last-named, however, would show the highest combined efficiency, probably 85 or 86 %.

The exact economies to be realised from driving a cotton mill electrically cannot be obtained by theorising, and until someone comes forward who has sufficient enterprise and faith in the possibilities of an electric system to try it in a practical manner, either with a whole mill or one or two floors, the question of economy, which no one can doubt exists, will remain a matter for conjecture instead of an accomplished fact.

In the allied trades of printing and finishing mills there is a great immediate and undeniable application for electric driving.

The author had the pleasure of meeting, some time ago, Mr. W. Marsden, of Manchester, who happened to be contemplating considerable additions to his mill, and after due consideration he decided to adopt electricity as the means for driving the whole of the machinery contained therein.

Certain difficulties were at first encountered, as may be expected in any new departure, but these were quickly got over by the Clayton Foundry Company, who have given great attention to this electrical application, and now the whole installation of light and power is working most satisfactorily, and fully bears out what was expected.

Every machine is driven by its own independent motor, which is provided with starting, stopping, regulating switch and a meter, so that the power absorbed by each machine can be seen at a glance, and if too much power is taken, the defect is seen and remedied at once.

Amongst other gentlemen in this district who have devoted much thought to the electric power question generally, is Mr. Joseph Adamson, of Hyde; the author heard him speak at a recent meeting of the North-East Coast Institution of Engineers and Shipbuilders, when he gave some interesting figures as to tests between electric and rope driven cranes.

The speeds in cotton spinning machinery are exceedingly high, and the electric motor with its high speed should be the best of all mediums to adopt for driving this class of machinery.

The object of this paper has been to promote a thorough discussion of a subject which the author trusts will prove of interest to the members of the Manchester Association of Engineers, and in the hope that his object will be attained, he will now leave it to those who, unlike himself, have all their lives been connected with the textile industries, to raise those

points where difficulties will present themselves, for it is only by having a complete knowledge of the stumbling blocks which will be encountered, and which have to be surmounted, that the engineer can hope to see his efforts rewarded by success.

DISCUSSION.

Mr. Henry Webb said he did not profess to be practically conversant with the electrical transmission of power. With the view, however, of initiating the discussion, he ventured to express his disappointment at both the papers. Perhaps he expected too much, but certainly he expected to find a considerable amount of detailed practical information as to electric driving, and something as to its application to textile industries. As far as the first paper was concerned the author did not really touch the subject; if it were designated a paper on the loss by Friction it would be more appropriate, and besides the figures he gave as to friction were not in accord with modern practice. He did tell them that the first cost of electrical transmission of power would be three times the cost per indicated HP required, compared with shafting, gearing, &c.; also, that shafting could be driven by a motor fixed on the ground, and a belt to the shaft, also, that the experiment was worth trying of driving every spindle by its own motor. If the several shafts were driven by motors the only saving would be the slight friction in the rope race, and the extra cost would be prohibitive. As to driving every spindle separately, at present they were a long way from this, and the cotton trade could not afford such experiments.

With reference to Mr. Selby Bigge's communication, he was equally disappointed at the paucity of information given respect-

ing the subject. Mr. Selby-Bigge was thoroughly conversant with the electrical transmission of power, and knew as much or more about it than any man this side the English Channel. The firm Mr. Selby-Bigge represented had fitted up the largest works in Belgium, employing 2,000 hands, using electric power only; and looms were running in Ghent with electric motors. He was acquainted also with the best practice on the Continent, and some works in England, but gave them no specific information whatever, but only hoped they would have an interesting discussion.

The speaker's difficulty was this: he was very doubtful whether existing cotton mills could adopt electric driving with any economy; for example, he would put a case for Mr. Selby-Bigge to answer. He (the speaker) was connected with a modern cotton mill containing 100,000 spindles, half twist half weft, spinning American cotton, average Oldham counts. When every machine was running with the strap on the loose pulley the loss by friction was slightly under 18%. He wanted the author to tell them if by electric driving they could obtain better results than that, if so, at what cost? Lancashire people will be slow to adopt it, unless they can see both interest and depreciation on the outlay and increased economy; as commercial success could only follow when the saving in power exceeded the loss due to electrical transformation by an amount sufficient to justify the capital outlay.

He quite admitted that electrical power could be adopted in many works with economical results, such as ironworks, shipyards, print, dye and bleach works, &c. Mr. Selby-Bigge had been very successful in such works on the East Coast, but the conditions were very different from a cotton mill. Take ironworks for example; boilers twenty years old, rolling mill engine with the jar and shake of reversing brasses, collars, &c., loose, the work must be done in a few seconds irrespective of steam

economy; steam pipe three to four hundred yards long under ground, blowing at every other joint, an inch open pipe at the end ostensibly to let off the condensed water, branches to various machines for sawing, punching, &c.

These machines have separate engines, not built for economy and not a penny spent on them since they were made, not a tap or valve that will shut tight, consequently the engine was always running slow, day and night; if it stopped they might not be able to start it again. The electrical engineer came with new high pressure boiler, triple expansion engine driving the generator, wires to the motors on the sawing machines, &c.; the result, marked economy, and no wonder it should be so! But this was a very different thing from the textile industries, and he was of opinion that electric driving in this branch of industry was still in the future.

Mr. Joseph Nasmith said that as one who had made a special study of the conditions of modern cotton spinning mills, and having some knowledge of what had already been done in the direction of electric driving, he would like to make a few remarks. He coincided with the views expressed by Mr. Webb that both the papers, and especially the latter one, would have been more acceptable if the authors had favoured them with some precise details as to the cost of an electric motor installation for some specific mill. It would have been easy enough to have done that, because most people know, or at any rate it could easily have been ascertained from the cotton machinists, what were the number of principal machines in a particular mill. Therefore, it could have been ascertained precisely what powers would have been required, and from that the whole cost could have been calculated. It was quite correct that the electric driving of cotton mills had been tried in Switzerland and America. In South Carolina there had been several mills started and worked

by electrical driving. All these mills, however, were situated either on the banks, or in the vicinity of running streams, down which constantly passed large volumes of water. Turbines were put into a house adjoining the river from which cables were carried to the mill. It stood to reason that where people, through the bounty of nature, had a large volume of water at their command which reduced the cost for power, the conditions were more than ordinarily favourable. In South Carolina the innovation had not been tried long enough for the production of any reliable data. His information was that even those who have tried the new system in Switzerland were by no means satisfied with the result.

At the bottom of page 57 Mr. Firth referred to some experiments made by M. Fauquier. In reference to these experiments he might tell them that he (Mr. Nasmith) was responsible for the translation into English of that particular paper, and he might further say that as affording in any sense whatever a guide as to what ropes will do, or what power was lost in ropes, the paper was absolutely worthless. It dealt only with one set of ropes driving one dynamo. They would have to wait for the correct facts till the Northern Society of Engineers of France had concluded their investigations on the relative merits of ropes and belts. That particular Society had been making tests of main drives under different working conditions, so that the result of these trials would be extremely valuable.

On page 60 Mr. Firth had quoted extracts from Hirn's experiments on friction. Now with reference to the loss of power in driving cotton machinery, it must be borne in mind that this loss arose from a multitude of things within the machine itself. In some cases the spindles bind, in others the bands were too tight, while changes in the atmosphere will almost double the power required to operate the machine. Under these circum-

stances no application of an electric motor will save the power lost within the machine itself.

In a spinning mill the question of minute changes in the speed is of vital importance. If they had the slightest variation in the speed of an engine during the time the mule carriage was running out, and drawing and spinning were being simultaneously conducted, broken ends resulted. It was not an uncommon occurrence for spinners to have a number of broken ends simply through the lack of uniformity in the velocity of the engine. He should like to know, assuming electric motors were applied to every machine, if it could be guaranteed that the velocity at which that machine was driven shall be absolutely and entirely uniform throughout the whole of the period occupied by that operation. That was the crucial point, and the one which required the most attention. Even in America the bulk of the installations were installations of motors placed on the line shaft, so that the whole of one room was actuated by one motor. The question arose, supposing every machine was driven, have the authors considered what it meant. He was aware that suggestions were made to incorporate with each machine a small motor, make it part of the machine and let it drive it. A carding engine of the revolving flat type takes about ·6 HP to drive it. If a motor had to be attached to it the cost would be increased by about 15 %. What advantages could be expected from that? The only machines in a spinning mill which took any considerable horse-power were the mules, and the mule of all machines seems to be the one in which the greatest difficulty will be met. The figures quoted by the author as to the power absorbed, at different periods, by the mule scarcely correspond with those indicated on the diagram submitted (Plate 1), which was the line given in a dynamometric test of a short mule of 600 spindles, under working conditions. It will be seen what a wide variation there

was in the power taken at various periods, the range being from zero pressure to 235lbs. on the lever of the dynamometer, and the highest power being exerted immediately the outward run begins.

He ventured to think that if the advocates of electric driving for spinning mills would, in the first instance, devote their attention to the driving of the line shafts by motors, success would more probably be attained than if they attempted to drive each machine by itself. This was rendered more important when it was remembered that the full power on a mule was applied at once, so that the inertia of the moving parts became an important factor in the matter, as tending to give a reserve of power which aids in the uniformity of the velocity. Of course it was a little consolatory to the members of the Association that these electric departures would not eliminate the engine.

It might not be inappropriate to mention that it was well known to those who had made a study of cotton spinning, that one of the chief dangers to be feared was the presence of electric diffusion, either in the complete machine or air. It was acknowledged that where this existed the spinning was worse, the yarn was weaker, and in fact the product was by no means so good as when that electric diffusion was absent. He wanted the authors to consider what was likely to be the result to cotton spinning if they applied motors to each machine, with the consequent magnetisation and effect on the cotton. Cotton was one of the worst fibres in the world to spin, and nothing was more injurious to it than the generation of electricity. Therefore, if this was going to be aggravated, the cotton spinner's task would certainly be rendered more difficult. These facts certainly required careful consideration, because an ordinarily constructed modern mill was largely composed of iron, and therefore the more liable to the danger referred to. He had spoken pretty strongly for the sake of eliciting a convincing

reply. He was convinced that the period of electrical driving of cotton mills were not far distant, on account of the facility with which the power could be carried about the mill. At the same time the instances given with reference to Mr. Marsden's mill were by no means convincing. A gentleman who absorbs 24 HP to drive a drying machine—while affording an admirable subject for the work of Mr. Selby-Bigge—must either be making a large profit or be very careless. A good millwright could have effected a large saving, and drying machines were being driven, friction included, at the expenditure of from 5 to 7 HP. The conditions of a cotton mill were unlike those of any of the instances quoted by Mr. Selby-Bigge. Intermittent use of power affords an opportunity for saving, while the constant and uniform use, as in a cotton mill, did not give the same loss or the same chance of saving. Therefore, before the time came to apply electrical power to cotton mills, he thought the authors would have to give the subject greater consideration, and acquire a fuller knowledge of the difficulties to be overcome.

Mr. Joseph Adamson was under the impression that Mr. Nasmith thought the authors wanted to unduly rush the question of electrical application to textile manufacturers. If Mr. Nasmith would take a tour in Switzerland and there observe the prevalence of electric driving, he did not think he would have hesitation in recommending the cotton spinner to adopt the electric motor. In the speaker's opinion, no one who had tried the new system would revert to the old methods. A blowing room or scutching room could not be driven as well in any way as by electricity. Personally, the speaker was greatly in favour of the adoption of electrical power wherever it was applicable.

Mr. Alfred Saxon considered the paper read by Mr. Firth to have "overshot the mark." He had been attempting to prove

that the friction in textile mill driving was a much greater evil than it really was, and had used language which, to say the least, was extravagant. He agreed with Mr. Henry Webb that in the case of forges and rolling mills, where there was a great amount of waste in steam arising both from friction and also from general neglect of valves and joints and wearing parts, the application of electricity would be a decided saving. He instanced two examples of friction in forge engines; in one case the full load on the engine was 243·3 indicated HP, the friction load being 93·3 indicated HP, or 38·34 %; in the other case the full load was 411·6 indicated HP, the friction load being 143·65 indicated HP, or 35 %. It was obvious that the saving in such cases as these could be considerable.

He also wished to supplement Mr. Nasmith's remarks in reference to the experiments of rope and leather belting, quoted by the author on page 57. The serious defect in this case was the small diameter of the pulley on the countershaft, this being only 34¼in. in diameter, whereas all authorities on rope driving agree that the diameter of the pulley should not be less than thirty times that of the rope used. In the case of the $1\frac{9}{16}$in. diameter ropes, the pulley should not have been less than 47in. diameter. The application of the $2\frac{5}{32}$in. ropes on the 34¼in. pulley would naturally give a worse result; the pulley for this diameter of rope should have been not less than 65in. diameter. The case cited, not being a proportionate job, was worthless as an argument as to the amount of power lost in transmission by this type of gearing.

Reference had been made by the author to tho cost of maintenance and wear and tear in gearing. The firm of which he is a member supplied the whole of the gearing to an Oldham cotton mill over fifteen years ago, and during the whole of that period there had not been a single replacement, the only cost being that of lubrication and attendance, so that in a well-

proportioned gearing job the wear and tear was exceedingly little. The author was wrong in his assertion that adding more weight to the load increased the friction on the parts "more, at any rate, than momentarily." He, Mr. Saxon, had diagrams taken from a large pair of engines in a textile mill which showed conclusively that the friction was practically constant under different loads, if the diagrams were not taken too soon after the changes in the load were made, so that all the bearings and parts might have the opportunity of assuming their normal condition.

The amount of friction in a case attested to by the Chief Engineer of the Boiler Insurance and Steam Power Co. Limited, recently was 20% of the total load. This might be considered to be equally divided between the engines and gearing, so that if the whole of the friction in the gearing were to be saved by the application of electricity it would only be 10%, the engines being required to drive the generating dynamo.

On page 64 the author referred to the cost of ordinary gearing at about £5 per indicated HP. He would take the amounts as quoted by him. In a mill of 500 indicated HP the gearing would cost £2,500; in an electrically driven mill the cost would be £15 per indicated HP, making the cost for 500 indicated HP to be £7,500, or £5,000 more than the ordinary gearing. Interest on the additional amount expended at 4% would be £200 per annum, so that they must see what the saving would be by the application of electrictity to recoup them for this outlay. He would assume, for the sake of argument, that the whole of the gearing friction will be saved, viz., 10% on 500 indicated HP equal to 50 indicated HP.

On the authority of the Chief Engineer of the Boiler Insurance and Steam Power Co. Limited, he might state that there was a triple expansion steam engine working, the calculated cost per indicated HP per hour of which, with coal at 6/- per ton, was

·044d., or 28 indicated HP nearly for one penny per hour; this would give about 46 indicated HP for twopence per hour. Take 50 indicated HP at 2¼d. per hour for 56 hours to the week; this would give 10s. 6d. per week, or £27. 6s. per annum. The loss then on an electrically driven textile mill, assuming all the gearing friction to be saved, would be in interest alone on the extra capital invested £172. 14s. per annum.

In reference to the difficulties of driving the spinning mule electrically, as pointed out by Mr. Nasmith, they would be very great. It seemed only possible to do this successfully in connection with the driving of the rest of the machinery, which had a steadying effect, as it had been found in practice that with the preparation machinery of a cotton mill stopped the turning of the mules "only" showed more irregularity.

He wished the authors success in their endeavour to introduce what they considered to be a more economical system of driving, and thought the special applications cited by them on a small scale to textile machinery would be an encouragement for them to persevere.

The President (Sir E. Leader Williams) said he thought it would be a long time before each mill had a motor for every machine. As it was evident that there were still many speakers who desired to contribute to the discussion he suggested that the further discussion be postponed to the next meeting.

RESUMED DISCUSSION.

SATURDAY, FEBRUARY 23RD, 1895.

The Chairman (Mr. T. Daniels, ex-President) expressed the hope that since the reading of the paper the members had looked up the question, and that many would be in a position to offer

a few remarks on the subject. He had pleasure in asking Mr. Ashbury to initiate the resumed discussion.

Mr. THOMAS ASHBURY said he had pleasure in continuing the discussion, and in doing so he would like to express his obligation to the author, Mr. Selby-Bigge, for the great pleasure he afforded the speaker, as well as a few others, during their recent visit to Belgium, by conducting them over some of the excellent electric installations in that country. There, undoubtedly, was to be seen one of the brightest examples of electrically-driven machinery probably in the world. It was the National Arms Factory, at Herstal, near Liege. In these works, there were 11 miles of belting, and it employed 2,000 hands, turning out 250 rifles per day. Judging from the title of the paper, he certainly anticipated a considerable amount of detailed information regarding what had been done as to the application of electricity to the textile industries. Certainly there was no doubt that electricity, to a large extent, could be applied for the purposes of driving machinery, as had been evidenced by its application to cranes. To specifically refer to the paper, he must confess his intense disappointment that the author had not placed facts before them so as to base a discussion upon and which also were prominently absent in Mr. Firth's paper. In reference to Mr. Bigge's paper, he would like to learn something of the capital involved and the success achieved respecting electrically-driven mills.

He would like to ask whether any success had attended the application of other metals as a conducting medium, such as steel or iron. Mr. Bigge referred to the fact that Lancashire was noted for its steam economy, and that he was, as it were, "bearding the lion in its den." The speaker could only assure him that it would be impossible for the author to visit any other county where he would receive a heartier welcome, or anybody

who would listen more carefully, without prejudice, to any new facts than the Manchester Engineers. Regarding this subject, however, they regretted he had not told them as much as they had a right to expect. At a recent meeting held at Newcastle, the President of the North-East Coast of Engineers referred to the works at Liege, which were electrically driven, and pointed out certain facts which were not refuted by the author who was present. He said: "It has been settled by careful experiment that the consumption of steam in a Corliss engine was about 14lbs. per indicated HP, whilst the losses are 10% in engine friction, 10% in the dynamo, 2% in the conductor, and 15% in the motor." That showed 27% loss for dynamos and conductors, which was certainly very heavy.

In a paper* submitted to the Association a little time since, Mr. Alfred Saxon referred to at least half-a-dozen instances, both of driving by gearing and ropes, in which the average friction was from 23% to 28%. And the engine losses were 10%, 8½%, and are as low as 6%. Mr. Webb also stated that the total amount of friction throughout a mill at Bury was only 18%. Such being the case, the percentage of friction or of loss in electrical driving was exceptionally heavy, and he was not surprised to read in a report of a meeting at Hartlepool, the speaker† say: "Without wishing to depreciate for a single moment the value of electrical motors or electrical transmission, he thought it behoved every electrical engineer who had sufficient engineering knowledge to be careful in guiding his customers instead of misleading them. It was absurd to suppose as a general fact that all they had to do was to put down a dynamo and a motor, and connect it with cables, and an economy resulted. He was perfectly convinced that where a really high-class Corliss or triple-expansion engine could be put

* Transactions, 1893.

† Mr. W. C. Mountain, of Newcastle.

down, and the power transmitted by ropes, direct on to lines of shafting, and the shafting was erected in a thoroughly economical and perfect manner, that the shafting could be driven at less loss than would exist in a transmission plant where the power had first to be turned into electricity, passed through cables, and finally turned into power again."

Mr. Bigge, however, informed them that it was hardly likely that economy could result from electrical application to the present mills, and that they must take the case of an absolutely new mill. It would have been interesting if the author had submitted to them an estimate of the cost of such a mill. The cost of the upkeep, it was said, would amount to about 5 % of the capital involved. Would that upkeep include the cost of the engine and all the power required, or simply the electric power? Mr. Bigge said on page 10: "There is absolutely no difficulty which cannot be overcome"; but Mr. Nasmith had pointed out certain points regarding the action of electricity or magnetism on the cotton which undoubtedly required careful attention.

The author was of opinion that the various economies could not be tested till electrical driving was put into practical form, but the speaker thought that there was little in the paper to induce any capitalist to put down a new mill on the vague statements indicated.

Mr. G. P. Gass, junr., said that, to his mind, the only good results which would accrue from motor driving direct on the shafts was that they could have a central station, from which a group of mills could be driven. Otherwise till each machine could be driven separately he failed to see the value of electric motors as applied to cotton mills. In regard to the subject under consideration, perhaps it would be better if each confined himself to asking questions on the business with which

he was most intimately connected, which in the speaker's case was bleaching, dyeing and printing works. Every speaker seemed to think that for these works electrical driving was the 'very thing.' He thought, however, that there were a lot of difficulties in connection with its adoption. For instance, the general speed at which dynamos ran was very high; how would the authors regulate the degrees of speed between the motor and the machines? Again, in a bleach works there were a number of machines requiring considerable power to start with. Assuming they had a motor large enough to generate the power initially required, how would it go on afterwards? Further, would the motor stand the enormous vibration in some of the machines?

Mr. John Taylor remarked that sectional driving was not a new thing in this country. Considering the difference of cost between steam power and electrical power he could not anticipate a prompt application of the latter. Oldham, undoubtedly, was the place to test the merits of its adoption, but in printing and bleaching works the heaviest machines were the heavy calenders. These required from fifty to sixty indicated HP to turn them, all working intermittently, and how electricity would meet that he did not know.

Mr. Hans Renold said he had some hesitation in contributing to the discussion, because electricity was not a branch of engineering with which he was in daily contact, but his remarks would be simply from an outsider's point of view. In the first place, he thought the authors had somewhat mischose the title of their paper by endeavouring, as it were, to lead them to think that electricity was to be the future motive power in cotton mills. He quite concurred with the opinion expressed by Mr. Nasmith when he laid such stress upon the influence of the electricity on the cotton fibres, and although it might be to

a certain extent isolated, he did not think that it could be isolated to such an extent as to prevent it from seriously affecting the latter.

In his own opinion it would be impossible to introduce electricity into cotton mills.

Mr. Nasmith had alluded to some mills in Switzerland. In that country there were three mills driven by electricity, but they were careful to keep it outside the walls. It was brought from a distance and then transmitted in the ordinary way to the line shaft.

Mr. A. Rea, on being requested by the Chairman to say a few words, confessed that he was very much disappointed with both papers, and quite agreed with previous speakers as to the paucity of information contained therein. It was all very well to make general statements and assertions, but a few practical applications of electro-motive force would have been much more valuable, and to the point at issue, instead of that they were treated to an imaginary loss from friction, &c. That the subject was well worthy of careful consideration and treatment went without saying, and possibly they might yet see our factories driven by electricity from a central station, as described in the excellent paper read by Mr. Thwaites before this Association some time ago*. In the meantime the questions which presented themselves for solution were those put by Mr. Ashbury, namely:—The primary or first cost of an electric installation, partial driven, or complete, *versus* motive transmission by gearing, ropes or belts, say for a mill the size given. Second, the cost of keeping in repair so many motors, including armatures, brushes, &c., &c.; also the probable loss from cables, switches, connections, and so on. He might say that he had put this question to some electrical engineers of the first rank, who

* Transactions, 1892.

replied that the multiplication of motors was a very serious matter, fully corroborating Mr. Nasmith's view as to driving lines of shafting and not separate machines, where the exigencies were favourable, such as the application of water power, &c., on a difficult site. Third, the amount of power required in the motors, over the actual, to overcome the inertia of each machine, and the effects of sudden strains in relation thereto, where the load was irregular, &c. When all these were tabulated he was afraid they were still a long way off Mr. Firth's motor millenium.

Reference had been made to Mr. J. P. Bedson's courage for adopting electric propulsion at his new wire mill at Middlesboro', but, if the speaker's information be correct, the gentleman named was not likely to have many imitators, there being several drawbacks and difficulties not anticipated, which applied specially to driving wire drawing blocks by electro-motive force. To that no inference of a favourable nature, at present, could be made from this installation, which in any way solved the problem of electric propulsion.

It was much to be regretted that the figures given were not more reliable, such as the cost of rope driving, &c., and the loss due to friction. However, as the subject had been taken up, they might have the pleasure in the near future of hearing some other member give his views on this subject.

Mr. James Saxon was of opinion that the subject was well thrashed out at the first meeting, and probably might have ended there if it had not been so fascinating. The authors hardly deserved the severe remarks which had occasionally been made, because it was distinctly admitted by them that they could not give conclusive data till something tangible had been done in the direction indicated. He felt relieved, however, that steam engines would still be required in the future, if only in the promotion and generation of electricity. At the same

time the authors would have to adduce some practical and definite beneficial results before any capitalists would venture to adopt their ideas, notwithstanding the less amount of friction, due to the employment of electricity as a motive power, which they had claimed.

It had been clearly demonstrated that the friction in a well-constructed cotton mill was not so great as indicated in the papers. And, further, it must be borne in mind that just as electrical engineers were improving, so mechanical engineers were advancing in that direction, and the friction of machinery was becoming more and more minimised. In that respect, therefore, Mr. Bigge had a decreasing element to contend with.

Electrical diffusion, again, was undoubtedly a potent factor to overcome, but he felt sure that difficulty could be surmounted.

It was a surprising fact what a really small amount of power was required to drive the machinery in a large establishment.

He was afraid the authors would not make much headway with their scheme until they could clearly demonstrate an increased economy in its comparison with the ordinary motive power for driving textile machinery.

Mr. Clibehugh remarked that he somewhat differed from some of the other speakers, inasmuch as he thought the title of the paper referred, not only to the cotton industries, but also to the allied trades, namely, the dyeing, bleaching, and that class of works. In the latter trades there were undoubtedly enormous savings to be effected, as in many cases the steam engines were practically hot-water engines. He certainly did think that the time was yet distant regarding the application of electricity to cotton mills. Cotton spinners did know the advantage of triple-expansion engines, but, in the allied trades, they had not realised the many economies to be gained by

progress in the direction indicated. In a large dye works he recently visited, there were actually twenty seven separate engines and five boilers. He guaranteed to the proprietor that by the application of electrical driving, four of the five boilers could be dispensed with. Personally, he thought there would be no more injurious effect on the cotton fibre in mills where electric motors were adopted than there was at present where electric lighting had been introduced.

Mr. E. J. Duff said the papers were of great interest, but he thought Mr. Firth's remarks on friction were considerably overdrawn. The time was probably far distant when shafting, gearing, and belting would be cast away in the manner indicated, as indeed these agents were largely used in connection with the application of electricity for lighting, heating, and power purposes. He had some experience of electric lighting, and also the electric heating of metals, in connection with which most satisfactory and even excellent results had been obtained, though he could remember, in their infancy, many partial failures were experienced. He thought electrical driving would also become more perfect and general. He appreciated the efforts which the authors had made in bringing the subject before them, for the reason that so much prejudice appeared to exist in this country in regard to anything new, as compared with that existing abroad. With reference to the electric plant at Middlesboro', as applied to wire-drawing, he would be obliged if the authors would explain where the economy of electrical driving came in, as compared with a direct drive from the engine shaft, without the intervention of shafting and belting, or of electric dynamo wires and motors. He could not see the use of losing 10% of power in the dynamo, 2% in the wires, and 15% in the motors, or 27 % of power which could be almost wholly avoided by driving direct, saying nothing about

such initial cost of plant, and, after upkeep, of providing such a round about method of transmitting the power. He would also like to know how the insulations stood the shocks due to throwing on and off full load instantly, as required, on such wire blocks.

Mr. Saxon had referred to the efficiency of rolling-mill engines, page 80, and as he (the speaker) had experience in rolling-mill engines of both very light and very heavy types, he had found the friction in an unloaded engine and mill vary from 25 to 30 % of the power developed in rolling. He could not see how this loss of power could be minimised by electric-driving, seeing the drive was generally quite direct in modern mills.

Mr. Daniel Adamson, having been asked to say a few words about electric driving, remarked that he came forward with considerable diffidence, as he felt he was more open to the charge that had been brought against the authors and some of the previous speakers of not being able to say much about electric driving of textile machinery than they were, but, in this he was comforted with the feeling that it ought to be ancient history to a Lancashire Society to hear anything about what had been brought so nearly to perfection here, and that therefore nobody could reasonably be expected to come before them and show anything fresh on the lines they had been going on so long.

He, therefore, looked upon Mr. Selby-Bigge's paper as an attempt to divert their thoughts from the present groove, so that they might begin to look round and see if they could not get a little nearer the perfection they were all striving for by some other route.

The lines he would suggest that this matter be approached on was not to look at the small saving, or otherwise, of coal, but to ask whether it would not be possible to get more work off a given plant by means of electric driving.

Saving coal was a very good thing in its place, but Lancashire had not been built up on savings. He knew a firm who could tell for the last thirty years exactly how much oil, coal, waste, &c., had been used per week in each part of their plant, and the records looked imposing, but the result had been that they had devoted so much time to the saving to be effected on these minor points that their business has decayed.

If, however, it could be shown that by electric driving they could increase the output from a mill by say 30 %, as had been done with printing machines in the States, then Mr. Saxon's minute calculations as to the cost of coal per indicated HP per hour, and interest on the increased outlay required were swallowed up.

His reasons for suggesting that an increased output might be expected from electric driven tools were, perhaps, not based on very dependable observations, but nevertheless he thought the point deserved some attention.

They were told by spinners of experience that the speed at which cotton machinery ran had now reached the limit the fibre would stand, and they were also told that cotton mills must run with absolute uniformity. Of course both these facts were interdependent if true; but quite unintentionally they found out the other day that all mills did not run with the clock-like regularity they imagined, and that machines might vary as much as 6 to 8 % between morning and afternoon, and as much as 3 to 4 % under an hour, and he was credibly informed that with a suitable tachometer the revolutions of the engine could be counted from the variations of the speeds of the spindles of ring frames. All this tended to show that with a regular speed the output under present conditions would be increased, and it was just such a regular speed they obtained from an electric motor. An electric motor when built for a given speed will turn at that

speed within a very small variation under all loads, from nothing to full load, and even if overloaded.

Another reason why he thought that more output might be expected from an electrically driven mill than a mechanically driven one, was that if it is found possible to put a motor to every machine, it should be possible to run that machine faster than at present, because of the easy starting obtained from a motor. In this connection he might mention something analogous in his own experience. Boiler shops were served by overhead travelling cranes, and it was found impracticable to run the travelling motions of these cranes in their own works when driven by ropes beyond a certain speed, on account of the swinging of the loads when the crane started. Since they adopted the electric cranes the latter run 2½ times the speed of the old ones, without any inconvenience to the men, on account of the easier and slower starting.

Mr. Nasmith mentioned the varying friction losses in a machine owing to the spindles binding, &c. Now another of the beauties of electric driving was that by means of the ammeter, which can be attached to any or every motor, it was possible to see at a glance the load on a given machine at the instant (and not half an hour after, as when indicating an engine), and thus if there was anything in the internal arrangement of the machine that required attention the dial showed it, and the same could be quickly traced.

The same speaker, and others, were rather confused between the frictional electricity present in a factory and electricity in the form as used for lighting and driving, and although this point had been pretty well disposed of by a previous speaker, it might be as well to point out that the former was caused in a great measure under present arrangements by the friction of belts, and of course under the ideal arrangement of a motor to each machine this trouble would not arise.

Mr. Webb said Lancashire people would be slow to adopt anything that did not show on the face of it a saving over present conditions, but it seemed to him that if Mr. Selby-Bigge had everything cut and dried he would go to cotton spinners and not come here, and that things being as they were in a sort of half proved state, it would be to our interests to take the matter up, and either prove it useless or carry it to a success, and not wait until the rest of the world had adopted electric driving, in spite of what might be said in that room, as they certainly were doing.

As to the cost of electric power he would refer them to a paper by Mr. Alexander Siemens, read before the Northern Institute of Mining Engineers, in which he said that for driving their Woolwich works the outlay on about 1,200 HP was about 30 % less than in case of the old plant it replaced, and the actual cost per HP per hour over six months was under a halfpenny, including coal, wages, wear and tear, &c.

One of the previous speakers had spoken of the novelty of electric driving as an objection. This, even if true, could hardly be considered fatal, or progress would be very slow. Several speakers had mentioned the attention that electric motors might possibly call for, but our own experience of them went to show that the only attention required was that entailed in oiling the bearings and keeping the machines clean, which would, of course, be much less than doing the same for the numerous bearings about a factory; that would be done away with. In fact, an electric motor, properly made and adapted to its work, required less attention than a grindstone in the works, as it had no more working parts.

Sparking has also been mentioned, and although this should not occur, even with continuous current motors, yet the risk of such happening at all could be done away with by adopting the three-phase system of electric power transmission, in which

there are neither brushes nor commutators on the motors, there being absolutely no electric connection between the running parts of the motors and the supply, and therefore no place for sparking to arise. This system, although not much used in England, was finding considerable favour in Switzerland, and also in the United States, where cotton mills had been driven for nearly the last twelve months on it, and very satisfactorily.

As to wear and tear, they found it so far to be practically *nil*; in fact, it only consisted in replacing the brushes as they became worn down, and as motors were usually designed to allow this to be done readily, it was a very simple and inexpensive operation.

Mr. Rea had opened the question of three-motor travelling cranes against one-motor cranes, and he was much obliged to him for doing so, because it was something he could speak definitely about; and as he said it afforded a good example for comparison with a mill driven, as at present, from one engine, and driven by independent motors, he would be able to say a few words about cranes which otherwise he should not have considered relevant. Our own opinion is decidedly in favour of three-motor cranes, and this appeared to be fully confirmed by the practice in the United States, where they were certainly ahead of us in this line. Our objection to the one-motor crane was that it did not go far enough; it of course did away with the long ropes or square shafts down the shops, but they still had to keep in all the clutches, bevel wheels, and square shafts across the shop to distribute the power from the one centre to the various motions. Although Mr. Rea had given them figures as to the extra cost of three motors against one motor, he had said nothing of the cost of the elaborate system of clutches, &c., required by the latter method, to say nothing of the loss of efficiency.

Mr. Rea had spoken of the large size of motor his electric friends had always recommended him to adopt. This large size

motor was inherent to the one-motor crane for at least two reasons. First, a larger motor was required on account of the lower mechanical efficiency of such a crane as mentioned above; and secondly on account of the different type of motor used with each kind of crane. The starting power of the shunt-wound motor of the one-motor crane was only about one-third that of the series-wound motors used on three-motor cranes. He also mentioned the up-keep, &c., of three motors against one, but, as he had already said, this was a very small matter; and, also, it must not be forgotten that even if the one motor was switched off immediately each time the crane was left (which was unlikely), the total time the whole of the three motors would be in operation would doubtless be less than half the time of the other, with a corresponding reduction in the slight wear and tear that did occur.

Several speakers had objected to the papers before them on account of the very general statements made, but he thought those who made the most of this point laid themselves open to the same objection; and it might comfort his hearers to learn that our own experience of electric driving was such that whoever had tried it would never go back to mechanical transmission. In conclusion, he thanked them for the opportunity afforded of expressing his views on this subject.

Mr. Henry Webb said it was with the greatest pleasure that he rose to move a vote of thanks to the authors for their communications, as he certainly believed that the subject was the most important that could be submitted to any company of engineers. He should like the authors to know that the remarks which had been uttered were in no sense intended to be in a hostile spirit. Of course, on a subject upon which they were not practically conversant, it only remained for them to indicate any practical difficulties which apparently presented themselves.

Mr. JOSEPH NASMITH had pleasure in seconding the same, and in supporting the sentiments expressed by Mr. Webb. Of course it was sometimes necessary in a discussion to elicit information, best to hit hard, and as the authors wanted to know what really were the facts of the case, he thought that object had been gained.

There was no doubt that the possibilities of electrically-driven cotton mills was in the near future, and sooner or later the Lancashire people would have to face it.

Mr. G. H. FIRTH, in replying to the discussion, said it ought to be understood that his share in these proceedings had been unwittingly brought about by circumstances, and that the original intention was for him to be the reader of a contributed article only, but for certain reasons the plan had not been adhered to, and unfortunately, perhaps, a few notes of his own, prefatory in purpose, had been construed into the form of a paper, hence the unusual appearance of two readers on that occasion.

Dealing with the tone of the majority of the remarks that had been made on his portion of the paper, he had been very much amused at their simplicity, and the imitative style adopted by successive speakers in their assertions, and consequently, their weakness of argument.

He had been accused of exageration, but he must be allowed to say that it struck him that this element, unconsciously, of course, was very much in evidence in the criticisms that had been attempted.

Mr. Webb said, "that if the author had called his paper a frictional one it would have been more appropriately named." If Mr. Webb looked again he would find it distinctly stated in the paper that friction was the principal consideration, and was dealt with in order to show where the adoption of electricity

might prove beneficial. As to the remark that the figures given were not "in accord with modern practice," he submitted, on the contrary, that that was just what they were. If they had been in accordance with old notions they would have heard nothing about them. They were not in accord with ancient practice, because they were obtained on lines approved of by present day high scientific authority, and were obtained recently from experiments on modern machinery and by himself and other practical workers, whose chief fault, perhaps, was their enterprising spirit.

Mr. Nasmith's remarks, he considered, were very much to the point, and exactly fitting the occasion. He would only notice one or two points in passing, and the first was with regard to Rope v. Belt driving. Mr. Nasmith said that these experiments described by M. Fauquier in his paper, to which he had drawn attention, were "absolutely worthless." Undoubtedly this may be so as affording scientific data for future operations. Still, the results might be taken as an instance, in actual practice, of the baneful results accruing from bad design and malpractice; this was the object he had had in view, and thought it answered its purpose very well. As to the friction and changes in velocity in electric motors: for the former all depended on the method of application. The internal friction of a machine, of course, would not be affected by an external motor, but if spindles were driven by independent motors it would be a consideration, very greatly in favour of the electric drive, because of the saving in bands, driving cylinders, belting, &c., and the friction arising therefrom. In the case of cards, he remarked in his paper that it would be inadvisable to drive each one separately; a line shaft would probably be best. So far as change of velocity was concerned, under varying loads, electricity would compare very favourably with mechanical transmission, 3% or even less being quite within practical reach.

Mr. A. Saxon said that he, Mr. Firth, had "overshot the mark," and was "extravagant in his language." Well, perhaps it was so, but he certainly did not yet feel, from what had been said, any qualms of conscience about it. On the contrary he thought that Mr. Saxon would, on maturer consideration, come round to a better state of mind, when his views would probably be more in accordance with "modern practice," and the ideas expressed in the paper. The experiments which he said he had made on the friction in a textile factory would assuredly have to be modified somewhat, because his result of a constant friction under a varying load was erroneous. Mr. Webb might also take the same remark respecting his 18% total loss; properly investigated this would probably turn out nearer 30%. He had made one set of tests which came very close to these figures.

Mr. Joseph Adamson and also Mr. Daniel Adamson also spoke in terms which were to the point and very acceptable. Other criticisms had been made, some more or less favourable, and some otherwise, for which he was much obliged, but which did not call for any particular remark from him; anything of relevancy to the question would probably be replied to by Mr. Bigge, and would perhaps be more to the point than anything he could say on the matter. He thanked all present for the very kind hearing they had accorded him.

Mr. Selby-Bigge in replying to the numerous questions which had been raised during the discussion upon his paper, said that judging from the number of criticisms which had been passed on what he had stated, it was evident the subject was one of considerable interest to those gentlemen who were connected with the textile and allied industries.

Those people who took upon themselves to bring new departures and applications of electricity before the public, must

to use a vulgarism, stand to be shot at. He welcomed fair criticism of every kind.

When he first brought up before the Iron and Steel Institute the question of running the machinery contained in iron, steel and engineering works electrically, many objections were raised to his views, and although many difficulties had to be met, faced, and overcome, the result had been that the applications recommended had eventually proved a great success.

When he first thought of developing the application of electricity to the textile and allied industries, Lancashire immediately recurred to him, and it was to that county that he determined to submit his views, as in no part of England is so great attention paid to steam economy and saving in fuel as in the Manchester district.

In selecting the title of his paper, "Electricity as the Future Motive Power in the Textile Industries," he certainly did not at the time intend it to be inferred that it applied solely to the cotton industry, but rather that it should embrace not only the cotton industries, but also the allied industries such as printing, dyeing and bleach works, etc. However, as many speakers had taken the title to refer simply to cotton mills, he would reply to the points raised as far as lay in his power.

Mr. Webb had remarked that in the paper there was a certain paucity of information. They would all probably admit, considering what had been done in this country, in America, and on the Continent in reference to electrical driving of textile machinery, that the information could not have been at the present moment much enlarged.

As he stated in the beginning of his paper, his object was to promote a thorough discussion and to ventilate a question which had never been raised before at a public meeting. In this manner, he would be able to obtain from people who had been all their lives versed in matters appertaining to the

cotton industries, what, in their opinion, would be the stumbling blocks to the applications of electric motors for this particular work. He did not stand before them as affecting in any way to be himself conversant with the details of textile work. Certainly, he had been through a great many mills and had a general knowledge of the machinery employed. He wished to learn from the members of the Association which he now had the honour of addressing, every objection which could be raised to the application of driving, and then if possible to reply fully to every objection raised.

By way of supplementary information, however, he would cite to them the case of an American Installation on a very complete and large scale at the Columbia Cotton Co's. Mill.

The three phase system was chosen as offering special advantages for this work.

The mill being situated within about 200 yards of a river, water power was adopted for driving the electric generators, which are each of 500 kilowatts capacity, or about 670 electrical HP. each, which he believed to be one of the largest multi-phase generators built, running at only 108 revolutions per minute.

The variation in load on a mill linked together mechanically is so slow and small that the speed can be held to be almost uniform; in a distribution by motors, however, each motor must be capable of driving its shafting at a uniform speed, although the variations in the load put upon it might be considerable and very sudden.

This point was fully recognised.

The speed of the motors, of which there are 17, is 585 revolutions per minute; the highest variation in speed of any individual motor is 2·2%, and from that down to 1·5% in the various motors.

Each motor is of 65 HP, and is of the induction type, without commutators, brushes, or collecting rings of any sort, which is

an advantage in cotton mills, where fluff or cotton fibre is floating about in the air.

The motors are bolted on to the ceiling, and are coupled direct on to the countershafts.

The generators are driven by two double horizontal turbines, 48 inches in diameter. The working head is about 25 feet.

The voltage at the generator terminals is 575 volts, and is delivered to the motors at the mills without any intervention of transformers.

Each generator is separately excited by a small dynamo, and the current from this is used for lighting the mill as well, with 800 lights at a pressure of 110 volts, on the Edison three-wire system.

The loss of energy in the cables is limited to 2%.

The motors are all provided with resistances, placed within the armature spider. These resistances are used only in starting, and are cut out after the motor is nearly at speed by inserting a long lever into a socket and sliding a ring along the armature shaft until it short-circuits the resistance coils.

Dr. Lous Bell, in a recent article in *Cassier's Magazine* upon this installation, and from which the above particulars are taken, says (and he cannot do better than quote him): "As to the actual operation of the plant, it has now been working steadily for over eight months without the slightest mishap, and with singularly little attention, more than fulfilling both the guarantee made and the hopes of the mill engineers. It furnishes at once the largest multi-phase plant now in operation, and the first sweeping application of the electric motor for driving machinery for textile manufacturing."

Mr. Joseph Nasmith, in the course of his interesting remarks on the subject, touches on the question of the vital importance of regularity of speed. The speaker had just alluded to the regularity of speed in the case of the Columbia Mill.

Mr. Nasmith gave it as his opinion that they should devote their attention in the first instance to line shaft driving. He quite agreed with him, but he did not think they should in any way lose sight of the ultimate objects they had in view.

Owing to the complicated mechanism of the mule, the percentage of friction to the power actually expended in spinning the cotton would be found to be very large, and by a combination of mechanical and electrical knowledge the speaker could not help feeling that some considerable saving in friction might be effected.

Before many years were up he hoped to see central electric power stations laid down in the mill districts for supplying the electricity for power purposes to mills.

As in the case of central electric lighting stations, the cost per unit of electricity would be brought down to a minimum. This, however, was a matter for future consideration rather than for immediate pressure.

The speaker was going to mention the cost of production per electrical HP of 0·440 of a penny, and the cost of production per B.H.P. given off by the motors of 0·515 of a penny, mentioned by Mr. Alexander Siemens in his interesting paper before the North of England Institute of Mining and Mechanical Engineers at Newcastle, but he thought that these facts had already been referred to by one of the speakers during the discussion.

Mr. Nasmith mentioned the question of the magnetisation of the cotton owing to the proximity of electrical machinery. There were various methods for annulling magnetic influence, the effect on the cotton fibres would, however, in any case be static, and not magnetic, if it existed at all, but in those cases where electricity had been applied for lighting purposes this did not seem to have proved an obstacle, although he quite thought that the hint dictated by Mr. Nasmith's sound knowledge on these matters was a useful one.

Mr. Adamson, who had proved quite one of his strongest supporters, during the discussion had devoted a great deal of time to getting to the bottom of these matters, and had given them some most interesting information as to the large scale upon which electric power work had been carried out in Switzerland.

Mr. Alfren Saxon, the speaker understood, had said that the loss of friction did not increase with the load on the shafting, at any rate more than momentary. He (Mr. Bigge) could not quite follow Mr. Alfred Saxon in his argument, as it was a well-known fact that friction increases in a certain proportion to the load thrown on the shafting, gearing, or any mechanical form of transmission of power.

Several speakers had referred to the allied industries of dyeing, printing, and finishing works, such as those of Mr. Marsden.

Mr. Ashbury had asked what the various efficiencies of an installation of this class would be.

The speaker, in reply, said that in small plants of this description they reckon the efficiencies as follows :—

Dynamo.....	98 %
Cables	96·7 %
Motors	85 %
Total efficiency.....	76·4 %

In the case of Mr. Marsden's installation, and which the speaker believed was the first complete installation of the kind in this country, as the new annex to the works which had been dealt with, was driven and lit throughout by electricity, the machines driven included mangles, drying machines, fans, dye jigs, wetting-out machines, washers, &c. This installation had proved in working a thorough practical success.

In the majority of print and dye works there were a large number of high pressure engines driven from a number of

boilers, and it might be confidently taken, that, by a judicious and proper application of electrical driving, in the majority of cases one-half of the coal bill could be saved, and in some cases more than this. He thought that there was a great and undeniable future for the application of electricity in such works as these.

Mr. Ashbury had questioned the cost of upkeep of electrical installations.

The speaker would at once point out that the question of upkeep was one of the greatest points in favour of electrical driving. He had had recently through his hands, and under his direct observation, a number of installations of electric power where electricity had been applied under very varying conditions, and the cost of repairs of all these installations during a year's running had been practically *nil*. As a matter of fact, there was very little in a motor to require any attention. The motors were provided with automatic lubrication and carbon block brushes, which fed themselves forward automatically as they wore away.

In large installations, where there were from 40 to 50 motors, the contractors were perfectly willing to undertake the upkeep at 5 % per annum on the total cost, and this should prove an outside figure.

The cost of upkeep, in actual installations the speaker had had to do with, did not average more than 2 to 3 % per annum on the capital expenditure.

With regard to the sensitiveness of the electrical system, that was very marked indeed, and in fact it would be impossible with any mechanical means to get the direct proportion between the work done and the indicated HP on the engine, in such a sensitive and instantaneous manner as could be obtained electrically.

Mr. Gass had referred to the question of central stations for driving. The speaker believed these would come in the future, and had already touched on this point.

Replying further to Mr. Gass as to the possibility of regulating the speed of electric motors, he would inform him at once that the motor could be regulated or constructed to run at any desired speed. There were various devices for that purpose, which were in daily operation in most electric power installations. If the motor was built with sufficient margin and capacity it would continue to run at a fixed speed whatever the variations in load might be. This was a very important point in cases where an absolutely steady speed was required. It was necessary, however, for this that the generating machinery should maintain a fixed voltage, and this brought one back to the governor of the steam engine.

Mr. Gass had asked how the motors would stand when heavy loads were suddenly thrown on and as suddenly thrown off. He (Mr. Bigge) had carried out a number of applications of electric driving under these exact conditions, and provided the motors were of sufficient size had met with no difficulty in this respect.

Mr. Gass next mentioned the question of vibration owing to the direct gearing of motors to machinery. There were certainly difficulties with regard to the gearing direct of ordinary built motors, and after a certain time, the connecting wires between the armature and commutator would very likely snap. In all cases of electric driving they had to design the motors for the work they were required to do, and in such cases as these, the speaker recommended flexible connections between the armature coils and the commutator. When the armature was built mechanically and electrically to withstand the jarring influence of direct gearing and rough work, there was no difficulty in getting the armatures to stand.

Mr. Gass further asked how the machines worked in wet places. In replying to this, he might say that he had had during the past 18 months motors working in the open air with only a wooden hutch over them, during the whole of the recent severe winter, and also for a year previous to that. He certainly took every precaution to keep the machinery as dry as possible, and employed electricity as a means for heating the magnet coils of the machines. All these machines had stood this severe test, and although there were some 14 or 15 that had been working in this manner, he had not as yet had to carry out a single repair due to damp or moisture. In the dye-house of Mr. Marsden's installation, where, at times, a considerable quantity of steam collected, the motors had stood the test thoroughly, although in his opinion it was a more severe one than even that of the motors out of doors.

Mr. Taylor had spoken about applying the power to heavy calenders. He could only say that they were perfectly well able to deal with calenders in the same way that they had dealt with all other classes of machinery.

Mr. Hans Renold had laid great importance on the cotton fibres getting magnetised owing to the proximity of electrical machinery. Mr. Selby Bigge said that he thought that he had already replied on this point.

Mr. Rea, the speaker thought, was perhaps a little premature in his remarks as to the motors at Middlesbrough. They were working extremely well, and the generating dynamo of 600 HP had been running day and night since the new year without the slightest stoppage or trouble accruing. Mr. Rea had raised the question of the life of armatures of dynamos and motors. This, of course, varied in every installation. In some installations it was a great misfortune that they had to be constantly renewed, and in other installations they were found to run for years

without practically any expenditure having been made. This would, however, be found the case in mechanical work, as well as in electrical, and no hard and fast rule could be laid down for the life of dynamos and motors.

He regretted that it was impossible for him at present to give them more specific information as to the driving of textile machinery electrically for the simple reason that applications in this direction at the present moment were few and far between. They were, however, engaged in a number of experiments in connection with textile machinery. Several motors had been built of the enclosed type for the direct driving of ring spinning machinery. These motors formed a part of the machine themselves.

He hoped that at some future time he might have the pleasure of submitting to them the results of these and other experiments.

In conclusion, he had to thank the gentlemen present very cordially for the kind and attentive way in which they had listened to the remarks he had made, and trusted that the discussion which had taken place would be the first step on the ladder to opening up a subject which was undoubtedly destined to be one of the greatest importance in the near future to those interested in the textile and allied industries.

Electricity as the Future Motive Power in the Textile Industries.

Seconds and fifths of Seconds.

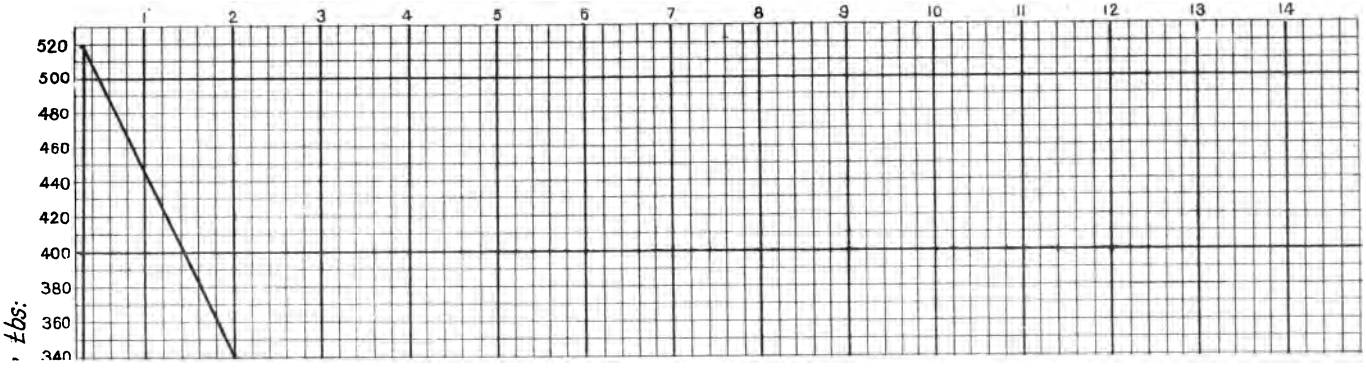

UNIV. OF MICH.

CYLINDER CONDENSATION AND SOME MEANS OF COMBATING SAME.

READ SATURDAY, 26TH OCTOBER, 1895,

BY

Mr. W. H. BOOTH, M.Am.Soc.C.E.,

OF LONDON.

There can be little doubt that James Watt recognised, as an obvious fact, the very simple phenomenon, known as cylinder condensation, and that he endeavoured to combat this by compounding the steam engine. Watt found the steam engine possessed of one cylinder, which did duty both as working cylinder and condenser, and he took the first step in compound working by doubling the number of cylinders, for he introduced a separate vessel in which the steam should be condensed, and thereby removed the working cylinder from direct contact with the condensing water. Watt's improvement has been so often referred to under the specific title of the air pump and separate condenser, that it has been overlooked as being really the first step in the compound principle, which to-day has attained to the use of four or even five cylinders, of which one, the condenser, is below the heat plane of atmospheric steam, and the others are above it. The air pump may be left out, for this is necessary simply to remove air, whose presence is an accident, or water, which might equally well, in many cases, be removed by a 30ft. (vertical height) drain pipe. Indeed one is often tempted to be surprised at the use of large air pumps where engines could be so easily fitted with gravity pipes to their condensers, and small pumps for air only.

Watt perceived the error involved in throwing cold water into a working cylinder which is immediately after to be filled with

hot steam, and all he did, as plainly indicated in his own writings, was to endeavour "to maintain the cylinder as hot as the steam that entered it." But when the exhaust opened to the condenser, the temperature of the steam in the cylinder would still fall to that corresponding to the condenser pressure. The range of temperature in the cylinder would be nearly as great as before. Yet great economy accompanied the change, and this economy was directly due to the removal of the condensing water from the cylinder. When water was injected into the working cylinder of the Newcomen engine it was first converted partially into steam by the hot walls of the cylinder, and the vacuum was only obtained by the use of a great excess of water beyond that merely necessary to condense the steam. This excess so cooled the cylinder as to demand an enormous amount of steam to again heat this to 212° at the next stroke. Thus, the weight of steam used per horse-power per hour was, according to Unwin, no less than that due to the use of 26·6 pounds of coal in the boiler. Watt reduced this to about one-third by the year 1800, and by the year 1815 to about an eighth, while, in 1834, it had fallen to but one-fourteenth. Here is Mr. Unwin's table:—

DUTY OF CORNISH ENGINES.

Style of Engine.	Duty in Foot Pounds per Bushel (94lbs.) of Coal. Millions of Foot lbs.	Pounds of Coal per I.H.P. per hour (estimated).
Newcomen	7	26·6
Smeaton	10	18·6
Watt, 1800	20	9·3
Lean's Report, 1815 ..	$52\frac{3}{10}$	3·6
,, ,, 1827	67	2·8
,, ,, 1834	98	1·9
,, ,, 1840	107	1·7
Leavitts Louisville Engine per 100lbs of Pocohontas Coal	140	1·33

Notwithstanding the separate condenser, the pernicious action of the cylinder was still maintained, though to a much less marked extent. There were two causes for this, apart from radiation losses. The first was the wetness of the steam itself, arising from priming or cooling in the steam pipe and exposed boiler crown. The water which thus entered the cylinder, hot, it may be, but having no store of latent heat, obtained this from the cylinder during expansion or exhaust strokes, and the cylinder thus cooled, in its turn robbed the next charge of steam of some of its heat, so producing more water to be boiled off during exhaust. Every pound of water, thus brought into the cylinder and evaporated therein, was thus responsible for an equal weight of initial steam condensed, and, in this simple way, water is seen to be cumulative in its action up to such a point, that any further accumulation is discharged unevaporated to the condenser. When this point is reached, further progress of the mischief is stayed. This shows the importance of arranging the exhaust ports so as to collect the water quickly, or, in bad cases, of keeping drip cocks constantly a little open.

The second cause of water in a cylinder is the liquefaction due to performance of work during expansion. The action of water so formed is surely less mischievous than that of priming, for the reason that water, thus formed, probably exists as fine mist distributed throughout the mass of the steam and, not being at once deposited upon the cylinder walls, is swept out with the exhaust *as water*, and not re-evaporated. It seems to me very probable that Watt had clear ideas on these points, for he put a jacket round the cylinder in order to keep this as hot as the steam which entered it. The tendency of the jacket is to evaporate any water on the inner surface of the cylinder, and it is obvious that, in a slowly moving engine, a jacket containing steam hotter than the working steam would evaporate all the water as it entered the cylinder, so that, during expan-

sion and exhaust there would be no priming water in the cylinder, and therefore there could be no cooling of the cylinder unless by the dry steam in it, and dry steam, being so poor a conductor of heat, and also having a comparatively low specific heat, would absorb but little heat from the metal. The cylinder therefore remains hot and cannot, of course, condense much of the next entering charge of steam. Granted that condensation now occurs in the jacket, to which it has been so to speak, transferred from the cylinder, yet such cannot be harmful. Water thus formed on the outer cylinder wall can be run back to the boiler; it absorbs no heat from the cylinder by re-evaporation. Watt made his jacket merely an ante-room to the cylinder, and he has been, in the past, ridiculed for this, it being argued that such a system is but paying from one pocket to another. But such is not the case, for we have now got the water out of the cylinder and the rest is simply a question of jacket drainage, and we must concede to Watt a knowledge of the action of steam in the cylinder and jacket, and a practice as advanced as the mechanical art of his day rendered possible.

Watt's jacket was that used by the Low Moor Iron Co., in their famous beam engines. It is used by the best Continental engineers of to-day, and Messrs. Hick, Hargreaves & Co., of Bolton, also have adopted the system.

THE CORNISH CYCLE.

We have been hearing a good deal of late about the Cornish Cycle of steam working, whereby in a single-acting cylinder the exhaust steam is first transferred from one side of the piston to the other, and thence exhausted to the condenser, Fig. 0, Plate 1, thus reducing the range of temperature on the working side of the piston where exposed to the initial steam. This was done, I presume, merely for convenience of working, the Cornish pumping engine acting on the down stroke of the piston only, and the spear rods pulling the piston up again. Possibly,

indeed probably, Watt was surprised to find how the Cornish engine was superior in economy to his pet double-acting rotative engine, but we can quite allow that he realized the thermal reasons for its superiority when thus made apparent to him, seeing that the fact was simply confirmatory of the reasoning which led him to add the separate condenser. Now Woolf, and his predecessor Hornblower, do not appear to have understood the thermal reasons for compounding, for they simply added a small first cylinder and carried steam for the full stroke in this before exhausting to the second cylinder in which the steam expanded as many times as this cylinder was larger than the first. The first cylinder merely acted as a measure to supply a fixed quantity of steam per stroke to the second cylinder.

In Fig. 1, Plate 1, we have an ideal diagram from a single-acting engine exhausting direct to the condenser. Here the cylinder is exposed to the full range of temperature, T^0 degrees, between the boiler and the condenser. In the Cornish Cycle the total range of temperature, T^0 degrees, is divided, as explained, into two parts, of which one T_1^0 occurs on the top side of the piston, and the other, t_1^0 on the lower side, Fig. 2, Plate 1.

In the Woolf or Hornblower engine the ideal diagram would be as per Fig. 3, Plate 2, where the total range of temperature being still T^0 degrees, we find that the range in the first cylinder, T_2^0, is but little short of the full range, and that in the second cylinder, t_2^0, is but little less than the range in the lower end of the Cornish cylinder.

The sum of T_2^0 and t_2^0 is, in fact, greater than T^0; the cylinder temperatures overlap, and the only benefits apparent in the Woolf system of compounding are those arising from the small area of the heat radiating surface of the hotter cylinder, and the reduction of leakage periphery of piston and valves exposed to the higher pressure. Woolf in fact secured mechani-

cal advantages, perhaps of greater importance in respect of leakage, than they would be to-day with our more perfect tools. But compare Fig. 4, Plate 2, the ideal diagram from a compound engine properly worked with about equal admission to each cylinder, and some capacity of steam pipe or other receiver, and we find that the sum of the temperature differences in the two cylinders, $T_3^0 + t_3^0$, are only equal to the total range, T^0. There is no overlapping as between the two cylinders, and the thermal range is that of the Cornish engine of Fig. 8, Plate 2. The cut-off in the second cylinder maintains the receiver pressure to a point as high as we may please, but not advisably greater than the terminal pressure in the first cylinder. The action of the Receiver is that of the idle side of the Cornish piston, and, properly managed, should lead to economy.

THE JACKET.

While, as stated, the Watt Jacket is now again coming into use, it has always seemed to me that the ideal jacket should be one supplied from a special boiler with steam at a higher pressure than the working steam, and that all the steam made in the special boiler should be passed through the jacket and into the main boiler by a reducing valve, thus effectively draining the jacket, blowing all air out of it and keeping it in a state of maximum efficiency, for there can be little doubt that where jackets have failed, they have done so through improper design, wrong fixing or bad drainage; also that best results have been secured where speeds have been slow, while as an exception to what has just been stated as to failure, probably a large amount of priming water would enable a jacket to constitute itself a cause of actual loss, measured on the total steam consumption of both cylinder and jacket, but that such a jacket, in the absence of abnormal priming, would shew a net gain.

In Fig. 5, Plate 8, is a diagram showing, by A, the apparent volume of steam that enters the cylinder up to cut-off. If we draw on this diagram the hyperbolic curve of comparison *p n* we see that the expansion curve finishes considerably above the hyperbola. If now we draw the upper hyperbola, originating from the final pressure in the cylinder, we obtain a fresh point, *m*, and drawing *m k*, find the real volume of steam, which entered before cut-off, to be C. This tells us that a volume, B, has been re-evaporated during expansion, and were we to measure the actual feed-water, we should be perhaps able to draw a vertical to the left of *m k* showing still greater initial condensation, for the diagram cannot show the evaporation which goes on during exhaust. Volume B is the minimum that can have been condensed. (The tightness of valves and piston is assumed.) This volume B disappears and re-appears every stroke, its only duty being to convey heat from the furnace to the condenser without performance of work, other than that represented by the area of that part of the diagram above the curve *p n*. The jacket is intended to prevent this loss.

Both the effect of a jacket and the faults it is intended to eliminate, become less as piston velocity and reciprocation speed increase, and makers of engines of high rotative speed state that they find no benefit from jackets and have ceased to use them, relying only for economy on the reduced range of temperature due to compounding. Compounding may, or may not, reduce the range in the first cylinder according as it is properly applied, but compounding, in a certain mechanical sense, is a source of loss, because it involves additional valves and pistons and other parts, and it can only be usefully employed where pressures warrant it, or the losses will overbalance the gains, and by compound is meant triple, quadruple, or a higher number of cylinders.

The economy of any multi-cylinder engine is entirely a matter of compromise.

In favour of the principle may be set down :—

1st.—Exposure of hottest steam in smallest cylinder, with reduced internal area and less radiation surface.

2nd.—Reduced range of temperature in any one cylinder.

3rd.—Reduced stresses in working parts and less friction.

4th.—Reduced periphery of pistons and valves exposed to high pressure and hence less leakage.

5th.—Reduced difference of the pressure on the two sides of pistons and so less leakage.

6th.—The use in the later cylinders of any steam that leaks past earlier pistons; and

Against the principle are to be set :—

1st.—Increase in number of working parts with increased piston ring friction, &c., gland friction, &c.

2nd.—Larger total heat radiating surface.

3rd.—Larger number of glands and greater chance of leakage thereat.

4th.—A greater difference between total work done in the cylinder and the net work of the diagram, *i.e.*, between the areas *a b c d e a* and *a b c f a* of Fig. 6, Plate 4.

This loss will be found greater in engines where the back pressure is large, but compound engines always have a full share of lost work, *g f c d e g*.

In addition to the thermic advantages of the compound principle, we perceive also the more mechanical advantages under head 4. Thus where cylinders have a diameter ratio of 1:2, the radiating area of the hotter cylinder ends is quartered, that of the barrel halved. Its inner surface at the beginning of the stroke is quartered, and its piston circumference is halved. The piston is also exposed to pressure of ratios on its faces of 16–4 in place of 16–1. These advantages, with the trapping

of such leakage as may occur, all tend to maintain a superior economy in compound engines *under the effects of age and wear.*

The first cylinder of a compound engine is usually wetter than the second, as shown at an open indicator tap. This appears to be explicable, as follows:—In the process of heat passage without performance of work there is an accumulation of heat at the bottom of the fall. The action is like that of a cascade of water. Water may fall the whole distance through pipes of small diameter, whose friction will absorb all the energy, and the water will flow out quietly at the foot. The quantity is there, but there is no splash as in the free fall. The work has gone out of it. So with the heat: it is not destroyed but appears in the final cylinder, the foot of the fall, where it has arrived, without doing work, by dodging into and out of the cylinder metal. It has travelled with the pistons as water, and been pushed before them as steam—a dead load all the way, like the miner on the Cornish man engine, who rises a stage every stroke, but rests on a side platform during the return stroke, so doing no work. The man always puts his weight against the rising rod, but, like the heat in the cylinder, steps aside until the next stage comes to his level.

But you cannot start hot water at 360° temperature through a cylinder and finish with as much water at 212°. The missing 148° has gone to convert some of the water to steam. This, and the distribution of the water over a larger cylinder partially explain the apparent greater dryness of the later cylinders, which is partly fact and partly appearance only.*

We may now illustrate the foregoing arguments by means of an actual diagram, which has been analysed roughly, not for the purpose of absolute proof, for I do not know the actual clearance capacity of the cylinder, nor does anyone know a

* Any actually greater wetness in any case being due to causes not connected with the action of the cylinder metal but arising from radiation and from performance of work.

better curve than the hyperbola as a guide in diagram interpretation, though you may read a good deal about the adiabatic curve and find, even then, that the professors are not agreed as to its proper index.

There is no mystery about the action of steam in a cylinder. At the same time there are no hard and fast lines on which to work, and the pages of mathematics lavished on steam engine subjects are waste matter to most engineers, chiefly useful to advertise the mathematical proficiency of the author, which they certainly do about as well as they exhibit his inability to explain things to the practical engineer. There is nothing more needed than the steam tables of Pray or others, and tables of areas, specific heats, &c., in plain figures.

Fig. 7, Plate 5, is a diagram from the Mc.Naught cylinder, of a beam engine, 28in. dia., 86in. stroke, 85 revs. per minute.

The cut-off occurs about 4·7in. to which if we add $\frac{3}{10}$in. for clearance length, 461 sq. in. for port surface, and 67·5 sq. in. for surface of 5in. length of a 4in. diameter piston rod, we shall arrive at an approximate exposed area of a cylinder wall and piston face at time of cut-off of 2,800 sq. in. Assuming that this surface accomodates itself to the depth of $\frac{1}{100}$in. to the temperature of the steam, and taking cast iron to weigh one pound per four cubic inches, we find that the exposed surface weighs 5·75 lbs.

As the initial pressure is 88lbs. and the volume of the steam at cut-off is I = 3,770 cubic in. or equivalent to a cylinder length of 6¼in., the clearance being about 4 °/₀ as found graphically from the curve of compression, the weight of steam at cut-off will be ·446lb. [or 3,770 × ·20 446 ÷ 1,728] by Pray's tables. The latent heat of this weight of steam is ·446 × 889·5 = 396·7 units. The water equivalent of 5¾lbs. of cast iron is say 0·8lb., and as the lowest cylinder temperature is that due to a pressure of 17lbs. or 219·4° F., the range will be 99° F. The cylinder is thus 99°

cooler than the steam which enters it, and must therefore absorb $99° \times 0{\cdot}8 = 79{\cdot}2$ units of heat up to cut-off point. The total latent heat entering the cylinder is thus $396{\cdot}7 + 79{\cdot}2$ or say 476 units and the fraction of steam condensed is $\frac{79{\cdot}2}{476{\cdot}0} = {\cdot}166$ of that which enters the cylinder. The heat set free is what raises the cylinder to the same temperature as the steam. There must enter the cylinder for this reason alone 116·6 volumes of steam for each 100 volumes shown by I in Fig. 7, Plate 5. The one fact of which we are ignorant is the actual thickness of the cylinder skin which we have assumed at $\frac{1}{100}$in. It certainly is $\frac{1}{100}$in. for a certain speed of reciprocation. The volume C, Fig. 7, Plate 5, if due to this cause entirely would appear to indicate a value of $\frac{1}{60}$in. Neither do we know how closely the cylinder will aproximate to the steam temperature, but this is included in the item of *equivalent surface depth.*

Equally is it obvious that the fraction, call it ·01 or ·001, will vary with the roughness,—indeed surface roughness is important where small fractions are concerned. Thus in Fig. 8, Plate 6, we may suppose heat to travel to the depth *a*, and the surface serrations will be less important than where heat only penetrates to a depth shown by the dotted serrations parallel with the surface zigzags, which then add 41 % to the exposed surface and its effect.

A steam jacket may be said to push heat through the cylinder surface film, as shown magnified in Fig. 9, where an army of heat waves travels from the jacket side J, to be slain by what we may for convenience call cold waves from C, the inner side of the cylinder. If the heat waves are to get through to C, they must move quickly enough, or the cold waves will cut them off below the surface like the head of a column in battle which never advances, though the rear is at quick march. The advance needs quickening or the cylinder surface can

never attain boiler temperature from the jacket side, unless the jacket exceeds boiler temperature itself. At most the army from J meets that from C somewhere in the body of the cylinder, and reduces the demand of heat from the initial steam. Hence the desirableness of the special higher pressure boiler to feed the jacket.

Professsor Reynolds has suggested air being regularly fed to the boiler to the amount of about 5% of the volume of steam generated, such air forming a protecting layer between the cylinder and the steam, and reducing condensation. The first steam certainly condenses as before, but leaves the air behind on the surface like the stones left on the sieve when sieving fine gravel. Such air reduces the condensation due to contact, and this is probably the more potent form of condensing action. Air would probably ensure economy even in condensing engines, and certainly in non-condensing engines, though in the former it will vitiate the vacuum to some extent.

Take now the same diagram, Fig. 7, Plate 5, and examine for condensation due to work. Neglecting the re-evaporation area above the hyperbola *s t*, the mean pressure of the hyperbolic diagram, originated from the point of cut-off *s*, will be found to be 41lb., or $p = \frac{P \times (1 + \text{hyp. log. } R)}{R}$, and P is 88lbs., and R is six expansions, the cut-off taking place at the equivalent of 6¼ inches in a cylinder virtually 37½ inches long. The cylinder area, net, is 608 square inches, and the work per stroke is 41 × 608 × 3ft., or 74,169 foot pounds. But of this amount, the portion, as far as the vertical S N, has been done in the boiler, and only the area S *d c* N by expansion in the cylinder. The ratio of this area to the total work is $\frac{\text{hyp. log. } R}{1 + \text{hyp. log. } R}$. The hyp. log. R is 1·79,176, so that the work done during expansion is 47,595 foot pounds, corresponding to 61·65 heat units, which

must be furnished by the expanding steam. The terminal pressure n is 21 pounds, so that the latent heat of the exhaust steam is ·446lbs. × 952° = 424·6 units.

In this we assume merely the visible steam present at cut-off. The heat that has disappeared as work is thus represented by the fraction $\frac{61 \cdot 65}{424 \cdot 6}$, being about 14½% of the steam present as steam at the time of cut-off. Part of this heat has been provided by the water, initially formed by the condensing action of the cylinder, and part by the cylinder walls which have radiated some of the heat they absorbed from the initial steam, or evaporated some of the water clinging to them. The action is mixed and complicated, but there is no reason to assume any mystery. If steam tables are correct we can readily use them to explain everything rationally, but we can lay down no rules and no formula, for we know nothing of the equivalent cylinder surface depth of temperature range; we do not know the action of the air present at all fully, nor is there a known means of determining the dryness factor of the steam, unless it be actually a little superheated.

Suppose a jacket so hot as to abolish cylinder condensation, and that the steam has been supplied dry. Now deliberately add 5% of wetness to the steam, and the old-cylinder action will be re-started, and may be again stopped by still further heating the jacket. Priming, which may cause a jacket to be a loss, is a most mischievous fault, robbing the boiler of heat, which not only does no work, but is contained in water, whose presence in the cylinder is so potent a factor in cooling the cylinder during the exhaust stroke.

SUPERHEATING.

The effect of superheated steam may now be traced. Steam is superheated when its temperature is greater than that proper to its pressure. Water and superheated steam cannot exist

together. Either the steam will become saturated, or it will absorb the water, and remain still superheated. In diagram Fig. 7, Plate 5, the hyperbola, traced back from the toe of the figure, shows that about 28½ % of the initial steam has been condensed and re-evaporated during the expansion. The latent heat in the initial steam per pound being 889·5 units, it appears that there is a shortage of 158·5 units, or 28½ % of 889·5, and if the initial condensation is to be stopped we must add this missing heat to the initial steam. As we are about to prevent condensation, we may neglect the weight of steam that now condenses and take the steam shown by the indicator to be present at cut-off, viz., ·446lb., each pound of which contains 889·5 heat units latent. As steam has a specific heat of ·480 we find that 158½ ÷ ·480 = 319·8° as the added superheat to prevent condensation. As the steam has already a temperature of 319°, it will require heating to 638·8° F., and all this superheat will have disappeared by the time of cut-off, and gone into the cold cylinder. There will now be no water in the cylinder, and, if none be present, none can be re-evaporated by the hot cylinder during expansion, and the cylinder will remain at 319°, except for such small amount as it may lose, to the dry steam in it, by radiation. If such be the case the steam which next enters the cylinder will not condense; it will start on its expansion superheated, for it cannot lose all its superheat to a cylinder at 319°, and very soon the exhaust will be discharged superheated, and perhaps slightly vitiate the vacuum, though, as it would so quickly leave the cylinder, the vacuum therein would more closely approximate that in the condenser than where the steam is wet. It is thus clear, by plain reasoning, that the amount of superheat required is by no means that found above, but only an amount but little in excess of that necessary to supply the heat necessary to make good the latent heat which disappears *as work* during expansion.

This we found to be 61·65 units in this particular instance, being 14¼ % of the initial latent heat, and corresponding therefore with a superheat of 162·4° or a temperature of 481·4° F.; and this argument is borne out by practice, the saving, due to superheating, being far in excess of what the moderate extra heat supplied to the steam would appear to warrant, unless the matter be reasoned out as above.

And it appears very simple when thus reasoned out, and does not demand any hidden or mysterious property of steam or iron to assist in unravelling it. There are people who seek for mystery, even in boiler explosions, which we all here know simply to be due to there being not enough room in the boiler for the steam that was in it.

Superheating is superior, theoretically, to jacketting, for it is the application of heat at the higher temperature, and its effects are felt no matter how fast the engine may run. Indeed, superheating strikes at the very root of the loss account, and nips it in the bud likewise, and no matter how small the superheat its effect is good and remains at all speeds, whereas the value of the jacket practically ceases at a certain limit of speed and may even reverse. Superheating is direct in its action, and will dry a cylinder that remains wet at even the very maximum rate of reciprocation.

SUMMARY.

For best results an engine must therefore be designed with a minimum of internal surface, unaugmented by coned pistons and cylinder covers, large nuts to fix pistons, deep cylinder lids with annular spaces round them, open stuffing boxes, long passages or rough surfaces; as to all which a recent report of Mr. M. Longridge may with advantage be studied. Other points are reduction of temperature range in any one cylinder, by compounding to a reasonable extent, by suitable valve setting and by a reasonable expansion in every cylinder, with no fall of

pressure in any cylinder below the initial pressure in the following cylinder.

Water separators or steam driers, which may be superheaters, are essential to economy. In all that is done we shall effect more than the means would indicate. Thus we superheat to save x% and find we have saved $2x$% or more, and the drier steam, moreover, gives less negative or back pressure, and reduces the area *g f c d e g* of Fig. 6, Plate 4, and more power goes into the fly wheel.

ABSOLUTE HORSE POWER.

In the high pressure diagram, as Fig. 7, Plate 5, while the expanding steam and cylinder heat really do work indicated by the area *s d c* N *s*, and steam must therefore condense in proportion to the duty it does; it is equally true that work is done on the exhaust steam by the piston to the amount of the area *a f d c b a*, this work being transmitted to the next cylinder. We cannot assume that the indicator diagram is the measure of the work done by the steam upon the piston, though the diagram correctly represents the energy in the piston rod. The steam cannot *know* whether the resistance opposed to it comes from back pressure on the opposite face of the piston, or from a brake on the fly wheel. Hence the importance of measuring the absolute work, in order to gain a true knowledge of heat disappearances.

In Fig. 7, Plate 5, the average pressure of 41lbs. was found as though the steam had expanded along the hyperbola *s t* in place of along *s d*. The area *t d s t* is really due to the heat of the initially condensed steam given out again by the cylinder, and is, so far, a reduction of the loss otherwise made, but it will be observed how the big end of the area is next the toe of the diagram, where its effect is least useful, whereas, had no condensation occurred, the diagram would have been almost that bounded by the upper hyperbola *h d*, and the figure *d h s d*, with its larger head to the end of the diagram, would be added

to the power area. The continued rise of the curve *s d* above the hyperbola, is an indication that the evaporation will continue during the exhaust stroke, and add to back pressure to the prejudice of economy. Obviously the triangle *s d t s* is the rectangle C coming to light again. By superheating we shall diminish C, or even make it disapper, and the points *d* and *t* will approach, coincide, or possibly cross one another, the curve of expansion approaching, coinciding with, and perhaps falling below the hyperbola, as the fractional index adiabatic curve should do, though when I meet such a curve I shall look closely for a leaking piston. I have used this diagram, Fig. 7, Plate 5, because I remember that it was from a cylinder spouting water at its high pressure indicator taps, and because I believe the valves were tight, being piston valves of Petrie's make.

The figures are only approximate and the curves are roughly drawn, as I had no intention of presenting this paper other than as an exposition of views. The time has not yet come when we can base closely figured arguments on the data and results of steam engine diagrams, as I tell my American friends, who calculate bridge stresses to a pound, and don't know the age of the baby in the middle car, or even the side of the car at which a hypothetical baby may chance to crawl.

We steam engineers are now not even agreed on the value of J. Americans use Rowland's value of 778 ft. lb., but Manchester men are not likely to abandon the figures 772 for so small a difference, seeing that it was at Oakfield, Whalley Range, Manchester, that the classical experiments were made which rendered possible the determination of steam engine efficiency; Joule having gone to reside at Oakfield about 1844.

A recent departure in steam engine practice is the Field engine. In this engine air heated in pipes, laid in the flues of the boiler, is forced by a Root blower into the cylinder during the exhaust stroke, thereby adding heat at the right place, and

diminishing the initial condensation during the next admission, both by virtue of the added heat and by the presence of air in the cylinder. The value of the application must be dependent on the quantity of heat available in the flues. To be of serious value it would appear necessary that the air pipes should not be placed next the chimney, but between economiser and boiler, or even earlier, as in the bottom flue of the Lancashire boiler.

This engine has never yet been properly tested, but I believe arrangements have been concluded to do so in a fair and thorough manner,

STEAM TURBINE.

In the steam turbine we have an engine in which, soon after beginning to run, the temperature of every part exactly corresponds with that of the steam flowing by such part. Cylinder condensation does not exist. The steam turbine is perfect, so far as it goes. It is practically an adiabatic cylinder, but fortunately you cannot take indicator cards off it, and so there can be no "monkeying round," with the fractional index curve it would probably show us.

FINAL.

The various means of combating cylinder condensation have been carried out, more or less partially, as follows:—

(*a*) In the high speed engine by frequency of reciprocation tending towards reduction of stroke duration and diminished effect of cylinder surfaces.

(*b*) In the single-acting Cornish pump and in the Willans' engine by the Cornish cycle system of steam exhaust.

(*c*) In many engines by the compound principle which reduces the range of temperature in any one cylinder.

(*d*) In the Willans' and other engines by arranging the exhaust ports to facilitate collection and exit of water.

(*e*) By steam or other hot jackets, as in inside cylinder locomotives.

(*f*) By superheating the steam, as now coming into fashion again.

(*g*) By the Field system of introducing hot air.

(*h*) By injecting air into the boilers to act as a screen in the cylinder.

(*i*) By abolishing it as in the steam turbine.

In conclusion, while perhaps able to advance nothing specially new and nothing startling, I hope I may have succeeded in showing that the study of the steam engine does not, if properly approached, lead to mystery, and that its action is so made up of factors, the value of which we cannot yet judge, that many results apparently contradictory will often be met with. Of all follies none is so great as arguing about jacket anomalies in the absence of any positive assurance that the jackets were really acting as intended, and I do not myself believe that any jacket ever did act as intended, unless it had a positive steam circulation, as either the ante-room to the working cylinder, or fed through by a special boiler.

APPENDIX.

In Fig. 10, Plate 7, is shown the cylinder of the Low Moor Iron Co.'s old 40-horse beam engine, kindly sent me by Mr. Sutcliffe, of the Low Moor Iron Co. The arrangement of the jacket is plainly shown with the groove at the upper end, in which, if I remember rightly, in the 60 HP engine supplied by the Low Moor Co. to my father's firm about 1834, there was a copper wire filling. Mr. Sutcliffe informs me that they made this style of jacketted cylinder over 70 years ago. Note the dished bottom of the cylinder.

The similarity is great between this old jacket and the modern cylinder in Fig. 11, Plate 8, made by Messrs. Hick, Hargreaves

& Co., who point out that although there is an asbestos packed space round the jacket at A, fitted with a wrought iron gland ring, which leaves the jacket free to expand and contract longitudinally, yet without this safeguard it is practically impossible, when blowing through, to heat the cylinder differently from the jacket. The steam enters the jacket tangentially, and the separated water is drained off at the lowest point. Continental practice with these jackets shows 5 to 6 % gain over ordinary jackets. Some recent 12 hours' trials of compound condensing engines, built by Messrs. Hick, Hargreaves & Co. for the Yorkshire House-to-House Electricity Co., of Leeds, show a water consumption of 14·6lbs. gross per indicated HP per hour, no allowance being made for loss at safety valves, water caught by separator, or any other form of leakage. The engines had cylinders 19in. and 35in. diameter respectively, by 3ft. stroke, by 80 revolutions, at 120lbs. pressure, indicating 400 HP, not a bad result at the now low pressure of 120lbs. The cylinders are jacketted, as in Fig. 11, Plate 8, and these jackets have been found very satisfactory by Messrs. Hick, Hargreaves & Co.

These two examples will be sufficient to show what was done by the leading engine builders of the days when Watt's influence must still have been at work, and what is their practice to-day? Between these periods has been a sort of decadent time, when engines have been made by anybody, and jackets worse than useless have been applied and condemned, because they were drained neither of air nor water, and were mere dead ends to a small pipe. It seems likely that the resuscitated old form of jacket will continue, and I see, myself, no objection to its continuance, even with that still better adjunct.

THE SUPERHEATER,

Of which we have, in Fig. 12, Plate 9, an arrangement as applied to Lancashire Boilers by Messrs. Hick, Hargreaves & Co., of Bolton, to whom I am indebted for the drawing, and who have

now put in a large number. It consists of a series of simple bent wrought iron tubes placed in the down take, as shown, steam travelling down one leg and up the other leg. The whole apparatus has been easily removed, examined. and replaced in 2½ hours. The valves are arranged to pass the whole or any portion of the steam through the superheater, so that the superheat can be regulated at pleasure. In practice, and these are useful figures to bear in mind, with compound condensing engines at 100lbs. boiler pressure, a superheat of 100° F. will give an economy of 15 to 20%; the best results accompanying, of course, the application to the least economical engines. In applying superheaters it appears to be recognised as necessary to place them as near the furnace as convenient. This is done in the Lancashire boiler, as shown in Fig. 12, Plate 9, while Fig. 13, Plate 10, shows the application of the Schwoerer Superheater to a water tube boiler at the Grand Junction Water Works at Kew, by Messrs. James Simpson & Co., of Pimlico. This Superheater so much used in Alsace, where for years under the able lead of the late M. Hirn, steam economy has been studied in a way that puts English engineers to shame, is made of gilled cast iron pipe.

In tests made by Mr. Osbert Chadwick the following results were obtained on separate occasions:—

	Jan. 1893.	Dec. 1893.	Feb. 1894.	Mar. 1894
Amount of Superheat.....	0°	57°	109·5	57°
Steam per pump HP hour	20·98	19·71	18·75	19·48
Saving effected, %	—	6·0	10·5	6·75

A further test with 121° of superheat showed 15%, the conditions for the tests being sufficiently alike to make the result substantially represent the gain from superheating, which it will be noted, is progressive with the amount of superheat as should be anticipated.

In a third form of superheater, that of Messrs. Mc.Phail and Simpson, of Wakefield, of which Fig. 14, Plate 11, shows an application to a Lancashire boiler, a novel but extremely interesting feature is introduced. The apparatus consists of four series of pipes: 1st, a set in the flues; 2nd, a length of pipe in the water space of the boiler; 3rd, a second set in the flues; and 4th, a second set in the water space of the boiler. In this way all the superheat may be taken out of the steam before it reaches the engine, and it would appear that such has been very usually the case, the steam being merely dried as the net result of its passage through the apparatus, or supplied superheated 8° or 10°, an amount altogether insufficient to secure any serious economy. This, however, is a mere matter for arrangement, and if the final (4th) passage of the steam through the water space were omitted an economy at the engine would be secured, for there would be a considerable amount of superheat. But very excellent results have been secured by the apparatus in respect of boiler efficiency, an improvement of 30, 40 and even 48 % having been produced in the evaporation per pound of coal, as a result of the addition of the superheater. These results appear to be due to the fact, not so fully recognised as it might be, that steam tubes are very efficient absorbers of heat from flue gases, and very efficient as transmitters of heat to the water in the boiler, and no doubt these facts account for the very excellent results obtained by the apparatus, which, however, will act but little as a superheater, unless it be deprived of the final lengths of tubes in the boiler, or perhaps these might be run through the steam space, not through the water space.

This, however, is a digression from the subject in hand, and it may be said, in conclusion, of the question of superheating that the three types illustrated have proved the entirely practicableness of superheating and are fairly durable, that in fact superheating has, we may hope, finally "come to stay," and

this may be partly credited to the use of mineral oils in place of acid-producing tallow and other animal and vegetable greases, whose easy decomposition was the chief if not the only cause of the decay of pistons and cylinders, once entirely set down to the so-called high pressure steam (about 60 or 80lbs.) that had begun to be employed.

Superheaters may be used with special fires to heat them if necessary, and have been so employed on the continent, and it may often be better to keep the superheater entirely distinct. It should be clearly understood how very large is the gain which arises from a small amount of heat applied in counteracting the influence of the cylinder of the steam engine.

DISCUSSION.

The Chairman (Mr. H. Webb, in the absence of the President) remarked that there was ample material in the paper for an interesting discussion, and he trusted that those present would freely state their views on the subject.

Mr. E. G. Constantine had much pleasure in welcoming that night an old friend in Mr. Booth, and in thanking him for taking the trouble to read a paper before the Association on a very interesting subject. The Cornish Cycle had been freely referred to, but he scarcely thought that the table of Duty of Cornish Engines, by Prof. Unwin, given on Page 110, did justice to the old Cornish Engines, and he thought a comparison between the present and past results, and the means adopted by the early engineers to combat cylinder condensation, would be of interest.

The best English performance of which he had any record was that obtained in 1894 by Prof. Kennedy, in testing a Triple Expansion Worthington Engine, made by Messrs. Simpson & Co.,

of London, for the Hornsey Sluice Station of the New River Water Co. Each cylinder was steam jacketted as were also the passages between each pair of cylinders. The duty obtained, amounted to 189,500,000ft. lbs. per 112lbs. of coal, equal to 1·59lbs. of coal per pump horse-power hour. The boiler pressure was 127·6lbs.

The best American results he had been able to trace were both obtained with engines made by the Ed. P. Allis Co., of Milwaukee. The engines were three crank triple expansion, the cylinders being fitted with Corliss valves and steam jacketted, and reheaters were provided between the cylinders. An engine of this type at the Harrison Street Pumping Station, Chicago, was said to have given a duty of 140,416,679ft. lbs. on 100lbs. of coal.

Another of these engines tested in 1898 by Prof. Carpenter at Milwaukee was credited with the enormous duty of 148,306,470ft. lbs. per 100lbs. of dry coal, which converted to the English standard is 160,503,246ft. lbs. on 112lbs. of coal, or a consumption of only 1·37lbs. of coal per pump horse-power, the boiler pressure being 120lbs.

These were examples of modern practice, in which were presumably embodied all the advantages to be derived from the use of high pressure steam, and the experience of over half-a-century, and yet it would appear that in the actual expenditure of coal per pump HP per hour, very little improvement had been effected during the last sixty years; for in 1835 a public test was made of the duty performed by the celebrated engine at the Devon Consols Mines, Cornwall, and this was given as 125,000,000ft. lbs. for 1 bushel, or 94lbs. of coal, equivalent to 148,936,170ft. lbs. for 1cwt. of coal, or 1·48lbs. of coal per pump HP per hour. As he had not the details of this test he was unable to say anything as to its reliability, but considering the emulation which existed at that time among the

Cornish Engineers, and the fact that the test was a public one, it seemed scarcely likely that such a result, if incorrect, would be allowed to go forth uncontroverted.

A further instance of the good work obtained from the Cornish Pumping Engines at their best, was furnished in the earlier volumes of the Proceedings of the Institution of Civil Engineers, in a paper contributed by Mr. Thos. Wicksteed, engineer to the East London Water Co.

In 1837, this gentleman paid a visit to Cornwall (not his first) for the purpose of inspecting, and, if satisfactory, purchasing a pumping engine for his company. While in the county he took an opportunity of verifying the claims made for the Cornish engine by practically testing the engine at Holmbush Mines, nr. Callington, and found it was giving a duty of 117,906,922ft. lbs. with 94lbs. of coal, or 140,484,926 lbs. on 112lbs., equal to 1·57lbs. of coal per pump HP per hour. The cylinder of this engine was 50in. diameter, stroke 8ft. 2in.; boiler pressure, 40lbs.; initial pressure estimated at 30lbs. Cut off ⅛th of stroke. Head through which the water was lifted 535·5ft. If this test was accepted as reliable, it showed a remarkable condition of efficiency, and there was every reason for believing that it was carefully conducted by a careful pumping engineer, with the full knowledge that his figures would be keenly criticised by London and other sceptical engineers, so that he (Mr. C.) felt perfectly justified in comparing that result with those of the present time, and summarised they were as follow:—

	Duty in ft. lbs. per 112lbs. of Coal.	Coal Consumption per pump horse-power hour.
Best English Practice	139,500,000	1·59 lbs.
Best American Practice....	160,503,246	1·37 „
Mr. Wickstal's test of Holmbush Mines Engine.....	140,484,926	1·57 „

The wonderful results obtained with the Cornish engines were attributable to taking full advantage of the expansion of steam, surrounding the cylinders with steam of a higher temperature than that of the cylinder steam, by taking the former direct from the boilers; while the cylinder steam was reduced in pressure by wire drawing, the use of the Cornish cycle, preventing radiation of heat from engine, pipes, and boilers by covering with non-conducting material; careful balancing of the pump rods and moving parts, so that they were moved with the minimum of effort and friction; and heating the feed water for the boilers by means of the waste gases, resulting in a high rate of evaporation.

That the Cornish engineers realised the importance of reducing cylinder condensation was further evinced by the extraordinary means taken to that end by providing, in some instances, fires round the cylinder and valve chest and under the steam pipe.

The evidence adduced would appear to indicate that for deep pumping the Cornish cycle engine was a formidable competitor of even modern triple expansion engines.

There were other points in Mr. Booth's paper he would like to have referred to, had time permitted, but he might perhaps be pardoned for expressing scepticism as to the accuracy of one paragraph in the paper on page 180, relating to superheating, where it was stated that "in respect of boiler efficiency, an improvement of 30, 40, and even 48% having been produced in the evaporation per lb. of coal, as a result of the addition of the superheater." It appeared from results obtained that the efficiency of the boiler and engine combined had been increased in some instances by superheating, but he failed to see how it could affect the boiler efficiency by increasing the evaporation per lb. of coal from say 6 to 9 lbs., or from 8 to 12 lbs. of water per lb. of coal (which would be 50%), or by any such proportion,

and he thought that in cases where the efficiency of the boiler was raised, as distinct from the engine, it must be due to other causes than the addition of a superheater and probably resulted from greater attention being bestowed on the firing and cleanliness, heating the feed water, &c. In conclusion he felt sure that the members would agree with him that they were indebted to Mr. Booth for his paper.

Mr. R. Gregory said he might correct the author in his statement that the superheater was "a series of simple bent wrought-iron tubes," by saying that really they were made of solid drawn steel.

He had had considerable experience with the superheater referred to in Fig. 12, plate 9, and several times he had been asked, if by putting the heater behind the boiler it did not destroy the effect of the economiser. The fact was, however, generally the heat of the economiser was increased.

Various tests of these superheaters had been made by Mr. Lavington Fletcher, and perhaps a few figures respecting them would not be unacceptable—

A test was made on a pair of tandem horizontal engines, cylinders 24in. HP, 46in. L.P., 6-0 stroke, 57 revolutions, boiler pressure 100lbs.

The temperature of steam after going through superheater was 540° average; the temperature of steam entering HP cylinders 475°; the distance between cylinders and superheater being about 50ft. and steam pipes having to pass over a roadway. The temperature of feed water after passing through economisers was 276° average, and before superheaters were applied it was 255° average.

With superheated steam the saving was 12½%. All the steam used by engines was superheated, and no trouble was

found with valves or pistons, all being perfectly lubricated with the same amount of oil as used before.

He himself tested the heat of superheated steam at 4 mills that day, and found them as follows :—

480° ..... B.P. 88lbs.	490° ..... B.P. 70lbs.
510° ..... B.P. 115lbs.	470° ..... B.P. 65lbs.

He might also add that he was aware of a McNaughted beam engine working with superheated steam and a pressure of 120lbs., using only 13·71lbs. of steam per I.H.P. per hour, as shown on a trial extending three days, made by the Insurance Co.

From these and other tests it would appear that in every case except one, the heat of the economiser had gone up, which was a question they were many times asked. The reason was that the superheaters made a saving of from 10 to 20 %, there was that amount of water less to pass through economisers, and so caused the temperature to rise.

Reference had been made to the Field engine, and in Bolton there was one which had been working for the past six months, but he was informed that the economical results were very far short of what were promised.

Mr. Charles Day thought the Council were to be congratulated on having persuaded Mr. Booth to open the Session with a paper on the subject of cylinder condensation. Its importance in relation to the question of compounding or conversion of compound engines into triples or quadruples could not be over estimated; also, in connection with the question of superheating, which again seemed to be coming into prominence.

There were, however, a few points in the paper to which he would like to refer. In the earlier portions reference was made to the range of temperature in a cylinder being the deciding factor as regards the amount of cylinder condensation. He would suggest rather that the principal factor in the question

was the amount of work done during expansion, and in proof of this would suggest the following example :—

Engine—single cylinder, non-condensing, boiler pressure 80lbs., allowing 5lbs. for drop between boiler and engine. Initial pressure = 75lbs., and this corresponds to a temperature of 320° F.

Therefore range of temperature was from 320° F. to 212° F.

If now they took a cut off at half-stroke they found that at the end of expansion there was about 15 % water present, but if the cut off occurred at, say, quarter stroke, the % would be about 25; whilst if it occurred at one-tenth, it would probably be from 35 to 40. These figures were partly the result of his own experience and partly extracted from Musgrave's book, and they showed that although the range of temperature remained the same, the amount of condensation might differ widely, and that the condensation was more dependent on the amount of expansion.

The author had stated that usually the steam in the first cylinder of a compound engine was wetter than in the second, and, as an explanation, it was mentioned that if the temperature at the commencement was 360°, and at the finish 212°, the missing 148° would go to convert some of the water into steam. This argument would only apply if the steam passed through the cylinders without doing external work, and such a principle was used in throttling calorimeters and for testing steam dryness; but in an engine working with ordinary steam the 148° would go towards the heat lost in doing work. As bearing on this question the following figures selected from reports of the Engine and Boiler Insurance Co., and The National Boiler Insurance Co., might be found interesting.

Table showing, for different engines the proportions of steam at the point of exhaust opening to the total steam entering the engines; all with engines working without jackets :—

HP.		Int.		L.P.
·77	.....	·79	.....	·68
·70	.....		.....	·70
·94	.....	·80	.....	·88

and even in one case with jackets in use—

·88	.....	·827	.....	·791

These figures showed that in ordinary cases there was less steam in the L.P. cylinder than in the HP cylinder, and consequently the steam was wetter.

In dealing with diagrams from compound engines, he had found that, in by far the majority of cases, the weight of the steam and consequently the dryness, had been greater in the HP cylinder than in the L.P. cylinder.

In view of the experiences and figures just given, perhaps Mr. Booth would oblige by giving further reasons for the statement that the steam in the L.P. cylinder was dryer than in the HP cylinder.

Referring to the means of preventing or modifying cylinder condensation, he said superheating would appear to be of great value, and from a point of economy he thought there could be no doubt that the results would be highly favourable.

It remained, however, to be seen whether the practical difficulties which were met with when superheating was previously in vogue were now surmountable. In view of the fact that cylinder condensation was the main defect in single cylinder engines working expansively, and generally also the principal reason for compounding, it was evident that superheating would be of higher value with single cylinder engines than with compound or triples. Hence it was probable that the designs of future engines would be largely influenced by superheating.

Mr. D. Fulton said that the author had dealt very cursorily with the Field engine, and he thought if Mr. Booth had thoroughly appreciated the possible future value of engines of that type more notice would have been given to it. Perhaps one reason, why engines on the Field system had not been so successful as the originators anticipated, was that they were not on the right tack. Field made a point of heating the air before supplying it to the cylinder, probably on account of the fear that otherwise the initial condensation would be very considerable. Within the past few months, however, in engines at present working, the air had been drawn directly from the atmosphere. As a matter of fact, the result was that no such initial condensation as was feared, did take place, partly because the air was itself heated, owing to the pump pressure, and also on account of the remarkable change that took place in the chest when the two fluids were introduced. As they were aware, air suddenly compressed to 100lbs. pressure was about double the temperature of steam at the same pressure, and the practice was to introduce the air at say 60°, and a proportion of steam at 100lbs. pressure. By the compression of the air in the presence of the steam, the fluid mixture became about doubled in temperature and so vapourised the moisture in the steam, the chest becoming a species of small secondary pressure generator. This suddenly evolved body of pressure was then allowed to expand into the cylinder and perform its work on the piston, the presence of the air in the steam also retarding condensation so as to greatly prolong the effective working life of the steam. Granted the correctness of these theories they had there a sequence which was perfectly novel, and which if it could be practically carried out would effect very large economies in steam.

The speaker had had the opportunity of watching certain of these experiments during the past few weeks, and the diagrams taken certainly indicated that the ideas of the builder were correct.

The German chemist, Nernst, in a book recently published, curiously enough, especially alludes to the subject under consideration, and to the critical point in the union of fluids, a full understanding of which would be of immense value to engineers. The speaker's experience was not sufficiently advanced to provide sufficiently practical data for laying before them that evening, but he hoped at a future time to be able to give some encouraging results.

Mr. C. L. Simpson said he had to thank the Secretary for posting him a copy of Mr. W. H. Booth's Paper on "Cylinder Condensation," which had given him an opportunity of attending the present meeting. Referring to page 114 where the author says that the ideal jacket would be one supplied from a special boiler, he might say that his firm Messrs. James Simpson & Co. Ltd., of Grosvenor Road, London, S.W., supplied to the Lambeth W. Works, Surbiton, in 1884, a Compound Rotative Beam Engine working two double acting pumps which were supplied with steam from three boilers. Two of these were Lancashire double flued boilers, 6in. 6ft. diameter × 27ft. long, the flues being 2in. 6ft. diameter, with four Galloway tubes in each, working at 60lbs. per square inch. A separate Cornish Boiler 3in. 6ft. diameter × 14ft. long, with a flue 2ft. diameter, supplied high pressure steam for the jackets at 100lbs. per square inch; this Engine on trial used 1·54lbs. of Nixon's Navigation coal per indicated horse-power per hour, but the benefit gained by having a separate boiler to supply the jackets was not worth the extra complication or expense.

Superheating. A great deal had lately been said about Superheating, and he would try shortly to give an explanation of the Schwoerer Superheater mentioned by the author, which Messrs. James Simpson & Co. Ltd., of London, erected in 1895 at the Kew Bridge Pumping Station of the Grand Junction

W. Works, but during this year some comparative trials had been made which had clearly demonstrated the advantage to be gained by using superheated steam.

Shortly, this Superheater was composed of cast iron tubes, having large corrugations both inside and outside, making a very strong section, the object of the former being to absorb the heat from the escaping gases, and the latter to give the steam circulating in the pipes the largest possible superheating surface.

The Joints were patented and made in a special manner, special care being given to their design, as formerly the question of joints was a source of trouble to users of superheaters in Mr. Hirn's time.

It would be seen from the illustration annexed that the Superheater at Kew was placed in the highest part of a flue of a Babcock and Wilcox Boiler. Arrangements were made for blowing off the soot and dust with a steam pipe, as the superheater to be efficient must be kept clean. In the same way scrapers were necessary to ensure the feed water heaters being efficient.

Trials were carried out with 57·7 F°, 109·5, 57· and 121· F° of superheat into the valve chest and comparing the results with the trials previously made without superheat shewed with 109·5 F°, 10¼ % economy, and with 121 F°, 15 % economy. All the feed water was accurately measured in special tanks erected for the purpose. One curious trial made was to measure the steam used by the independent feed pump and see what effect superheated steam had on it; this was done by condensing the exhaust steam and weighing the steam so condensed, the result being that the pump only used about half the quantity of superheated as when it was supplied with saturated steam.

Mr. Constantine mentioned the result of Mr. E. D. Leavitt's Louisville Pumping Engine, and the result for a compound engine was remarkably good. This engine was similar to the many large engines designed by Mr. E. D. Leavitt at work in

the Calumet and Hecla Mine, U.S.A. Now the first question was always: what will be the cost? But from what he saw when visiting the Calumet and Hecla Mine with Mr. E. D. Leavitt a year ago, they believed in having the best and paying for it.

The same speaker also mentioned Prof. Kennedy's trial made on a large pumping engine, having a capacity of five million gallons in 24 hours against a head of 263ft. This engine was a Triple Expansion High Duty Surface Condensing Pumping Engine, designed and manufactured by Messrs. J. Simpson and Co. Ltd., and on trial gave a duty of 139,500,000ft. lbs. per 112lbs. of Nixon's Navigation Coal, which was a remarkably good result, and one of the best results ever obtained in this country.

He was glad to have had the opportunity of hearing Mr. Booth's paper which was of a very interesting character to all users of steam power.

Mr. James Hartley said the question regarding steam jacketting, seemed to him to be, which cylinder should be jacketted? Some engineers preferring to jacket the high pressure, and others the low pressure. He had seen multiple cylinder engines with the high, others with the low pressure and intermediate cylinders jacketted, and it was somewhat difficult to say which was the best. He might have some radical ideas respecting receivers, in which he greatly believed, but he certainly thought the best way was to put a good receiver between each cylinder, and thoroughly break up the steam. In a case which came under his notice, they had some difficulty in starting the engines due to overloading, and being compound engines with the cranks at right angles, he suggested that they should increase the size of the receiver, and put in it a graduated copper coil, commencing from a small and increasing to a large coil, by which the difficulty was removed. The boiler pressure was 120lbs., and this pressure was sent through coil in the receiver,

which would certainly re-evaporate a considerable amount of the water condensed in HP cylinder. He thought if engineers would devote more attention to placing something of that kind between the high and low pressure cylinders, and the intermediate of triple or quadruple engines, and let steam be put through at the boiler pressure, they would get re-evaporation which was not obtained by the simple straight pipe. As regards condensation, a case recently came under his notice of a quadruple engine, 200lbs. boiler pressure, where there was considerable trouble in clearing the water from the cylinders. Steam traps were put at the end of the cylinders, and a considerable saving in fuel resulted.

The question of jacketted cylinders having a special boiler was one which he and the author had discussed many years ago. He thought that if the cylinders were thoroughly jacketted and drained—*a most important factor*—that the condensation would be reduced and much drier steam would be obtained than at present. In fact if this were thoroughly carried out, he would jacket every cylinder. A great deal had been said about Cornish pumping engines, but between these and modern cotton mill engines there was a very great difference. In the latter case they could not put fires in the engine house as in Cornwall, and therefore other methods had to be adopted. More attention should be paid to keeping the boilers, steam pipes, cylinders and receivers thoroughly covered, and draughts prevented from going through the boiler-house, which was an important point, that was shamefully neglected by many firms.

The author had referred to the McPhail superheater, regarding which he could mention several instances where its adoption had resulted in at least 30% more duty being obtained from the boilers than before its application. The tests had ranged over several days, and by separate authorities, the results practically coinciding and proving without doubt the results stated.

Mr. W. J. Jenkins thought that, in the discussion, it would be well to adhere as much as possible to the order in which Mr. Booth had written his paper, and he would therefore commence with the remarks that there need be no surpise at the fact that large air pumps were employed even in situations where gravity pipes could be used to drain condensers. Since a pump of considerable size was necessary to deal with the air and vapour, it was not surprising that that pump should be made a little larger and thus deal with the water in one operation, instead of having the trouble of arranging drains from the end of a gravity pipe. There was one arrangement of injection condenser, however, where the gravity pipe was almost always introduced, though that particular kind of condenser was not much in use in this country, owing principally to the comparative cheapness of fuel. He referred to the form of condenser, which was supplied with water cooled by artificial means, for use in situations where space was limited and water scarce. The condenser was placed at the top of a stand pipe 35 to 36 feet high, and the exhaust steam passed in just above the water in the pipe and ascended through baffle plates in the condenser, while the condensing water was introduced at the top of the condenser and descended through it, meeting the steam on its way up. A pump—generally of the rotary, or the centrifugal type—lifted the hot water from the well at the foot of the standpipe, and delivered it to the top of a wooden tower fitted with boards on edge over which the water spread, and being thoroughly broken up by the boards, ran to the bottom of the tower in dribbles, coming on its way down into intimate contact with an ascending current of air, which cooled the water to within a few degrees of the atmospheric temperature. The air and vapour were drawn out from the top of the condenser by means of an air pump on the engine, supplied by a small pipe from the condenser. By the use of the same weight of condensing water as of feed water a vacuum of

27 to 28 inches could thus be maintained, the waste being of course due to the vapour carried away, or absorbed by the cooling air passing up the tower. This arrangement was much used on the continent for central condensing plants, into which the whole of the steam from several engines, steam hammers, and other apparatus was conducted and condensed, and the saving due to the use of condensation, instead of exhausting into the atmosphere, averaged about fifteen per cent.

A still more common arrangement for the same purpose was the evaporative surface condenser, provided with the same kind of cooling apparatus for the condensing water, but that did not necessitate the use of a stand pipe.

Mr. Jenkins was much afraid that the genius of James Watt was as much in danger of overpraise as that of William Shakespeare, for it was certain that both these men, being human, had not time in their short lives to think of one hundredth part of the things attributed to them. Watt's greatness must be acknowledged from his visible works, and possibly his views of the action of steam in a cylinder were no nearer and no farther from the truth than those of many engineers of later days.

The great economy of the Cornish engine had been amply dilated upon by several of the speakers and he need only mention that many Cornish engines were working very economically and giving fairly good indicator diagrams showing considerable expansion, when actually the admission valve was wide open long after the apparent cut-off took place according to the diagram. The load upon the piston at the commencement of its down stroke was sufficient to accelerate the pump rods to a high speed in a very short space of time, so that in spite of the low average piston velocity, the actual velocity in early portions of the steam stroke was often as much as 700ft. per minute, and the steam was unable to follow through the admission valves at sufficient speed to keep the pressure up,

consequently there was an apparent cut-off early in the stroke, due to the throttling action of the restricted area of the ports. The question whether this combined expansion and throttled admission was good or bad had never to his knowledge been answered.

It might be true that Woolf did not understand the thermal reasons for compounding, and the same might be said, he thought, of modern engineers; that was purely a matter of opinion and equally great authorities were still ranged on the two sides of that controversy to-day, but he had no doubt that Woolf knew what he was aiming at well enough, and in Mr. Jenkins's opinion his results showed that he had attained his aim in quite a remarkable degree. It should be borne in mind that Woolf's engine was designed for times when pressures of 10lbs. per square inch were not so common as 100lbs. to-day, and as it was even then known that expansion below 5lbs. absolute was waste labour, Woolf had not that facility of choosing his point of cut-off in the high pressure cylinder that they had now, and he showed, not ignorance, but knowledge in carrying his steam nearly full stroke. Mr. Jenkins had been in the service of a firm which had made a considerable reputation by compounding beam engines working at 40lbs. pressure, either by Woolfing them or McNaughting them as circumstances permitted, and in all cases the cylinder volumes were 1 to 4, and steam was taken to $\frac{3}{4}$ stroke in both cylinders. Great economy generally resulted. Clearances of two inches at each end were by no means uncommon in these old engines, and the effect of the "measuring" cylinder upon them was enormous. The greater part of the total work of the engine was done in the boiler and the thermal effect of the action of the high pressure piston upon the low pressure steam was not to be despised. He would refer to this point again later on.

On the subject of jacketting he would ask Mr. Booth whether he had any opinion to offer as to the proved economy of the Sulzer type of engine, that is, an engine fitted with double beat admission valves and circulation jackets. That type of engine was not much used in this country, but was greatly in favour on the Continent, and with good reason. He would recommend all interested parties to study carefully the construction of the jackets and ports of the Sulzer engine, and they would not fail to be struck with the small amount of metal unjacketted, and the still smaller amount exposed to direct contact with the atmosphere. The steam engine was a very complex machine and when a man was designing one part he often overlooked another. The jacket was just one of those extremely simple things, which, at first sight, seemed to call for no designing ability, and thus it happened that so many conflicting results were obtained by its use. Was it not the case in everyone's experience that the same patterns of cylinder-covers and standards were used whether the cylinder had a jacket or not? And was it an unusual thing to find 3in. of lagging and non-conducting composition on a cylinder without a jacket, and 1in. only on one with a jacket? Instead of there being need for less lagging on a jacketted cylinder, he contended that there should be more, for the jacket kept the flanges and covers and other radiating surfaces at a much higher temperature than would be the case without. In many cases it actually appeared to be forgotten that, the very property of the jacket was to supply heat from one surface to another across a body of metal, and that all heat imparted to the outside was dead loss. Better have no jacket at all than a badly protected jacket. The high temperature jacket supplied with steam from a separate boiler was a mistake for a simple engine, because of the loss during the exhaust period. It was, for the same reason, a mistake on the low pressure cylinder of a compound, and

though it had often been tried it had not been shown to be of much use anywhere. This might be owing to increased outside radiation, for the principle seemed right for the high pressure and intermediate cylinders.

Coming now to Mr. Booth's ideas of the advantages of compounding as described during the reading of the latter part of page 116 and onwards, Mr. Jenkins regretted that Mr. Booth did not give a little more thought to the subject, which, to him, appeared so devoid of mystery, for then some mistakes might have been avoided. It was not correct to assume that the action which took place in the high pressure cylinder of a compound engine was repeated in the remaining cylinders without modification. This appeared to be the view of Mr. Day as well as of Mr. Booth. The reason for the wetter state of the high pressure cylinder was a thermal one, and was so obscure that many engineers were unaware of the existence of such a reason.

If Mr. Booth would do him the honour of reading his remarks when introducing for discussion the subject of the Relative Economy of Triple Expansion, Compound and Simple Engines before the Association on the 13th of February, 1892, he would find the matter treated on pages 26 and 27 at greater length than could be done during a discussion. In that paper Mr. Jenkins showed that with a triple expansion engine developing 122 indicated HP, the power developed in the high pressure cylinder was 100 indicated HP, of which 39 went directly to the crank shaft, and 61 were done upon the steam in the receiver and in the intermediate cylinder, while only 25¼ HP were developed from further expansion of the steam in that cylinder, although 42 were transmitted to the crank shaft. In the low pressure cylinder 14¾ HP were developed from still further expansion, and 40·54 were spent upon the shaft, leaving 18 HP finally wasted on back pressure. For

actual figures in heat units see Mr. Michael Longridge's report to the Engine, Boiler, and Employers' Liability Insurance Co., for the year 1893, page 60.

Mr. Booth agreed with the proposition that the greater part of the absolute horse-power of an engine was developed in the high pressure cylinder, but he did not follow the proposition to its legitimate conclusion. Nor would Mr. Jenkins himself have had such strong convictions on this subject if he had not been much employed in investigating the compression of gases and vapours from a lower to a higher pressure, an operation exactly the reverse of the action of the steam engine. If the steam in the intermediate cylinder, or receiver, resisted the action of the steam in the high pressure cylinder, then whatever heat disappeared from the performance of work in the high pressure cylinder, its exact equivalent must reappear as heat, or as work in the intermediate cylinder. Again, whatever steam entered a cylinder after the same had been working sufficiently long to have arrived at its normal working temperature, must leave the cylinder as steam, it could not leave it as water. The only water which could leave a cylinder was the water brought in with the steam, the water due to condensation to make up radation losses and the water of condensation due to work. The two latter items alone comprise all the water leaving the cylinder which was steam when it entered. Mr. Booth's diagram, Fig. 7, was erroneous, for it only showed by the area C, the surplus of steam evaporated during expansion, that portion which was evaporated during exhaust could not be shown; and, as anyone who had used a Donkin's Revealer knew, the evaporation during the exhaust was violent and rapid. He wished to emphasise Mr. Booth's statement, that the action of the metal alone upon the steam tended to make the cylinder dryer and not wetter at the finish than at the start of a revolution. The second cylinder

of any kind of compound was not taking steam from a boiler, but was taking a mixture of steam, water and work from the high pressure cylinder, and the last of these three quantities was nearly always overlooked, although it had an immense effect in the ultimate economy of the engine. It was conceded that the high pressure cylinder would do more work working simple, than itself and its two or three followers could do working compound, while the metal to be heated and to radiate heat would weigh 6 or 8 times as much with the compound as with the simple engine. Must there not therefore be much virtue in compounding to make up for all these heavy losses?

Fourteen years ago Mr. Jenkins had some experience with superheaters on portable engines, and the results were simply astonishing, so long as a careful and attentive man had charge of the engine, but charred oil and burnt gland packings were far too common for success. With gas engine oils and metallic packings, however, success could be assured, even with high degrees of superheat. He had some records of the tests of an engine of 150 HP, which used 12lbs. of steam per indicated horse-power per hour, the boiler pressure being 140lbs. and the temperature of the steam 630 degrees F. It was a compound engine, single acting, the high pressure cylinder being fitted with a trunk piston of the gas engine type. The admission valve and exhaust from the high pressure cylinder were worked by cams and were of the mushroom type just like a gas engine. In spite of the high degree of superheat the steam in the low pressure cylinder was moist.

Mr. Henry Webb, the Chairman, in a subsequent communication, said he was surprised no reference was made to the value of non-conducting substances with which cylinders were now covered, as one means to minimise condensation, and it would

have been interesting if any tabulated results had been given to show their value.

As to the idea of special higher pressure to feed the jacket, there was no doubt this would be better, but would it pay? And the same question applied to Mr. Booth's remark in comparison of English and Foreign Engineers as to methods of economy. After all, it was a question of pay; first cost, maintenance, interest, and depreciation had to be taken into account, and in this country of *cheap fuel* the engineers gave their customers that which all things considered was the best. Mr. Booth was in error in saying "the Field engine has never yet been properly tested." If there was one engine more than any other that had been thoroughly tested, and more frequently, it was the "Field." Prof. Jameson, Dr. Hopkinson, Mr. Twigg, and Mr. Dixon had made exhaustive tests; and the best result of which he had heard was steam consumption 19·6 with single cylinder non-condensing engine. At Bolton there was a Field engine running, and the steam consumption was 21lbs., without air 26lbs.

As to the value of superheaters, a beam engine with Corliss valves to both cylinders, working 30 revolutions at 120lbs. pressure was recently tested by the Boiler Insurance and Steam Power Co., Ltd.; the steam consumption was 14·7lbs., the cylinders were not jacketted. With superheated steam the consumption was 13·5. The type of superheater, Fig. 12, Plate 9, was first made by Messrs. John Musgrave & Sons, Ltd., of Bolton, nearly three years ago. They had made about 100 sets, all of which were working satisfactorily, the saving in several been quite as much as Mr. Booth states. A superheater was no good if what was gained by it was lost at the economiser.

Mr. Booth, replying to the discussion, stated that in answer to Mr. Jenkins he thought that the Sulzer people when jacketting

were perfectly correct in making their jackets as complete as possible, and that the avoidance of air contact with any part of a working cylinder was wrong. It was also most necessary that jackets should themselves be well protected from radiation losses by suitable coverings. At the same time, a jacket with good circulation and well drained, was probably less wasteful when badly protected than an equally badly protected unjacketted cylinder, for, after all, the water formed in the jacket would be returned to the boiler, whereas that formed in the cylinder was a loss both directly and indirectly, and he feared Mr. Jenkins did not appreciate this point, as he (Mr. Booth) would have liked him to do. Nor did he see how Mr. Jenkins could condemn the high temperature jacket on a simple engine. If such a jacket prevented condensation there would not be much loss during exhaust stroke, because dry steam would absorb but little heat. The possibility of a jacket becoming a loss was diminished in proportion as the temperature of the jacket was raised, and was increased according as the entering steam became so excessively wet as to be beyond the vaporising power of the jacket to deal with at a sufficiently early point in the expansion stroke. He could not accept Mr. Jenkin's regret as to having overlooked the causes of wetness ratio in cylinders. If he would again refer to the paper he would find a special reference to the absolute horse-power of the different cylinders. Seeing that the work done on the piston was measured by the whole area of the diagram below the lines of initial steam and expansion, and that the work passed to the crank pin was that recorded by the closed figure, usually known as the indicator card, it was obvious that no explanation was needed further than that made, viz.: that the absolute work must be measured, for, as stated, there was no knowledge on the part of the piston as to how the duty was distributed. But Mr. Jenkins did not properly follow out his perfectly correct statement as to

as much steam leaving a cylinder as what enters it after the cylinder had established a normal regime. This was a matter of no moment, except for the mischief it caused, the difficulty and loss came in the fact that the steam entered as steam, became at once condensed to water and re-converted to steam only when it was too late to do any work. The heat went into and out of the cylinder metal, and so arrived "at the foot of the fall" without having done work. The trouble was, there was as much leaving as entering the cylinder; this was what caused the loss; it was the absorption of heat by the water and the conversion of the water into steam that cooled the cylinder and caused initial condensation.

Diagram 7 was not erroneous: true it only showed a part of the re-evaporation and this was specially so stated in the paper. Of course there was re-evaporation during exhaust, but jackets and superheaters were designed to obviate this very fact, and would do so, if only there was enough of superheat and a sufficiency of jacket temperature.

Mr. Day had doubted the greater dryness of the later cylinders of compound engines, and had produced figures to show that this was not so, but while these might be correct he thought that when the L. P. cylinder showed less steam than the HP cylinder this must he due to the extraneous losses from radiation, and was not what he would term a thermo-dynamic fact. He quite agreed with Mr. Day that wetness was a function of the ratio of expansion as well as of temperature range, but then was not temperature range after all synonymous with expansion? also, the higher the expansion the greater the ratio of cylinder metal to initial steam, and hence increased proportion of steam condensed. There would not be much condensation with steam carried the full stroke, and tests carried out on such an engine would give some idea of the amount of cylinder action on the exhaust stroke, and show how

much heat was radiated to comparatively dry steam. The loss of heat by conversion into work would, of course, make steam wetter, but as emphasised by Mr. Jenkins, this loss was greatest in the first cylinder, which really did so much more work than appeared in the area of the coventional diagram.

Mr. Constantine's scepticism as to the large economy of the McPhail superheater would perhaps be modified if he recollected that this superheater represented, he believed, something like a doubling of the heating surface of the boiler and that it was probably heating surface of a high order of efficiency. However, the figures were vouched for by Manchester Engineers, who had carried out several tests. They appeared to show that the particular boilers were previously being called on for a too high duty.

Answering Mr. Webb he thought that he must still adhere to his opinion as to the lack of testing of the Field Engine. There had, it was true, been several tests and reports, and others not named by Mr. Webb, but of those he had seen, none of them, he thought, went to the root of the matter in the way he would himself like an expert in any question to report an invention to himself.

He did not clearly understand Mr. Fulton's remarks. There was nothing novel in the application of air. A system had been tried, he believed, on the Lancashire and Yorkshire Railway about 20 years ago or more. It was labelled Warsop's Patent, and Professor Reynolds, as already stated, had used air. Mr. Fulton's remarks were, he feared, too vague to allow of discussion. But he did not see any parallel between the Field Engine and that referred to by Mr. Fulton. Field appeared to aim simply at raising the temperature of the cylinder by blowing hot air through it during the exhaust stroke, and such hot air might be supposed to be in part a utilisation of otherwise waste heat. In the other system there was a claim for an economy due to a

little understood physical phenomenon to which Mr. Fulton gave no guide, and it was to be observed that temperature was to be obtained, might they say, by a partial Carnot cycle, but until something can be shown very clearly, there will be a very natural doubt as to the benefit to be derived from an expansion of a fluid, which was first to be compressed by the power developed in the expansion. Even if a thermodynamic principle be acknowledged, it must be conceded that a good deal of economy will be required to cover the mechanical losses inseparable from a compression plant.

He had corrected his description of the superheater in accordance with Mr. Gregory's statement, and as a fact he believed that a good deal of wrought-iron tube was really now made more cheaply of steel. He quite agreed with Mr. Hartley's remarks, and the meeting would perhaps pardon him if he mentioned that a novel method of superheating and jacketting was now being introduced by his friend Mr. B. H. Thwaite, who was well known to them all. Mr. Thwaite had fully explained the system to him, and though he was not yet able to give a full description of it, he would say that by it not only could an engine be jacketted throughout in a very perfect manner, but the steam could be superheated, dried, or re-heated at any point between the boiler and the exhaust. The system lent itself peculiarly to Mr. Hartley's idea of adding heat in the receiver. It was also particularly suitable for the jacketting of cylinder covers, and so far as he could reason the matter out, he did not see any cause to doubt that the practical tests to which the system was soon to be put, would show any weak point in it, for it was particularly capable of regulation.

In conclusion, he would add that his belief was strong in the avoidance of cylinder condensation, and the great value to be obtained from a comparatively small addition of heat. He also thought very little of any possible loss during exhaust strokes,

if only the water in the cylinder could be got rid off early, for the dry steam would not carry off very much heat, and the point to aim at was an early re-evaporation of all condensed steam, if any initial condensation did occur, or, better still, to stop such condensation by the drying and superheating of the steam to the safe limit.

---

11 Plates follow Illustrating this Paper.

CYLINDER CONDENSATION.

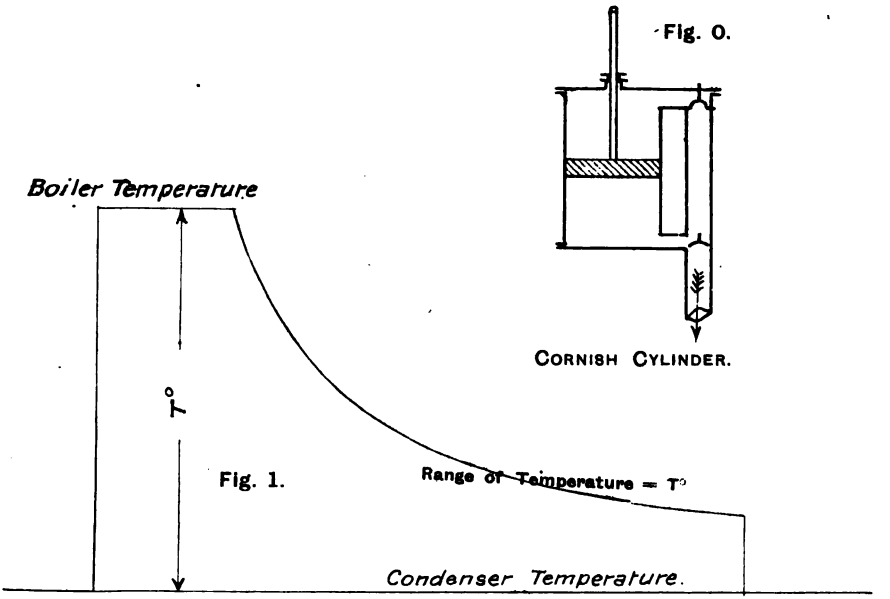

DIAGRAM OF ORDINARY, SINGLE-ACTING CYLINDER.

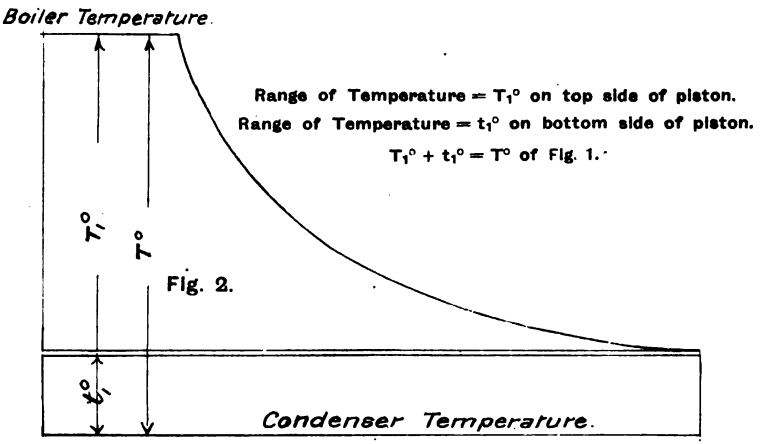

DIAGRAM OF SINGLE-ACTING ENGINE WITH CORNISH EXHAUST.

UNIV. OF MICH.

CYLINDER CONDENSATION.

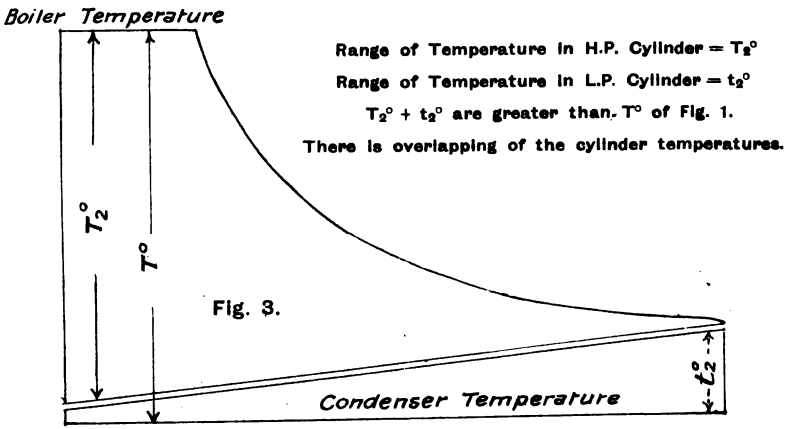

DIAGRAM FROM WOOLF ENGINE.

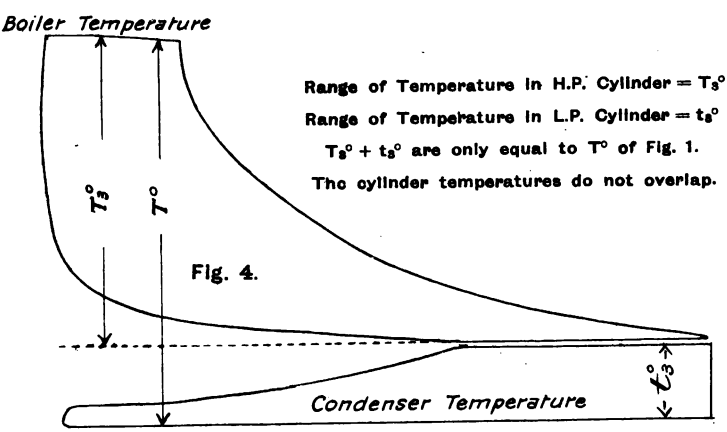

DIAGRAM FROM COMPOUND ENGINE WITH RECEIVER.

UNIV. OF MICH.

CYLINDER CONDENSATION.

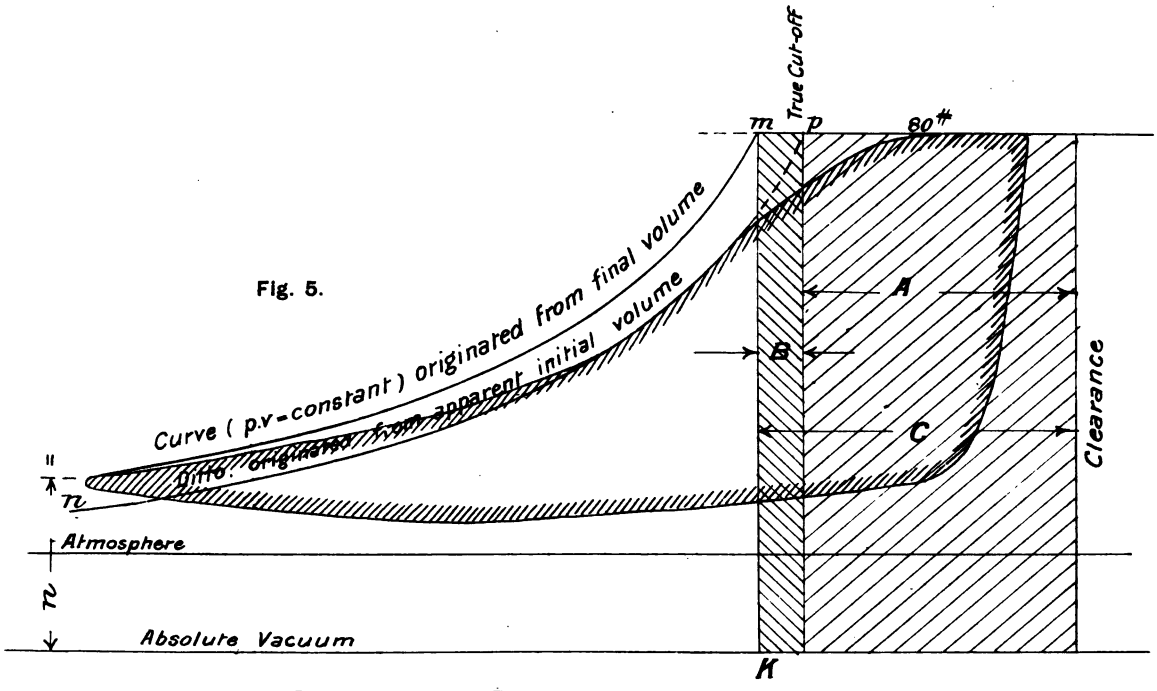

DIAGRAM SHOWING EVAPORATION DURING EXPANSION.

UNIV. OF MICH.

CYLINDER CONDENSATION.

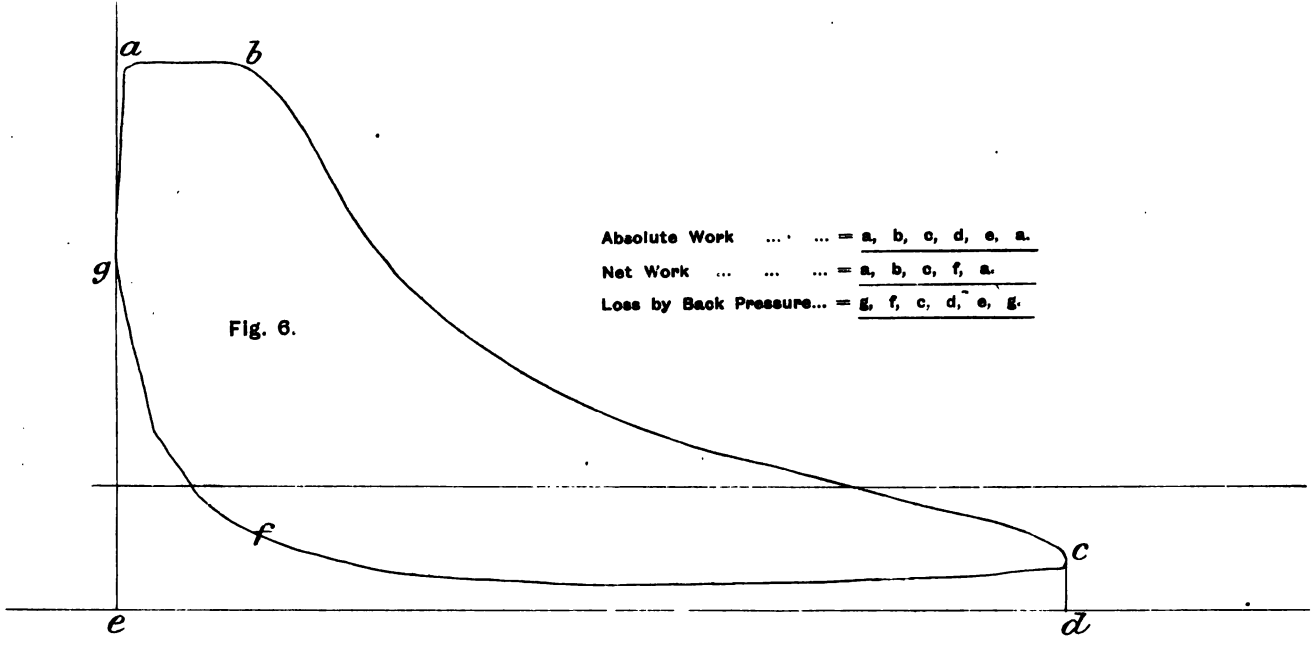

Fig. 6.

DIAGRAM FROM JACKETTED CYLINDER, 52IN. × 6FT. STROKE, 60 REVOLUTIONS

UNIV. OF MICH.

CYLINDER CONDENSATION.

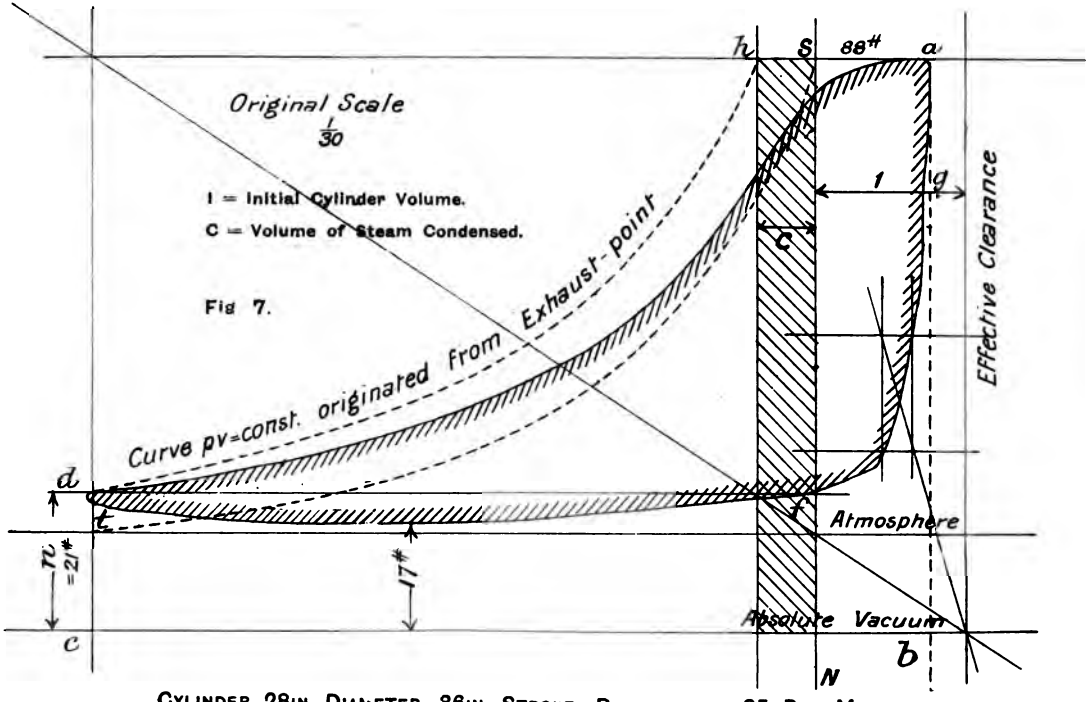

CYLINDER 28IN. DIAMETER, 36IN. STROKE, REVOLUTIONS, 35 PER MINUTE.

UNIV. OF MICH.

CYLINDER CONDENSATION.

Fig. 8.

MAGNIFIED ROUGH SURFACE.

Fig. 9.

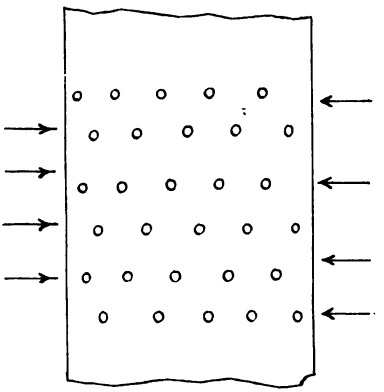

CYLINDER JACKET.

MANCHESTER ASSOCIATION OF ENGINEERS.

UNIV. OF MICH.

CYLINDER CONDENSATION.

Fig. 10.

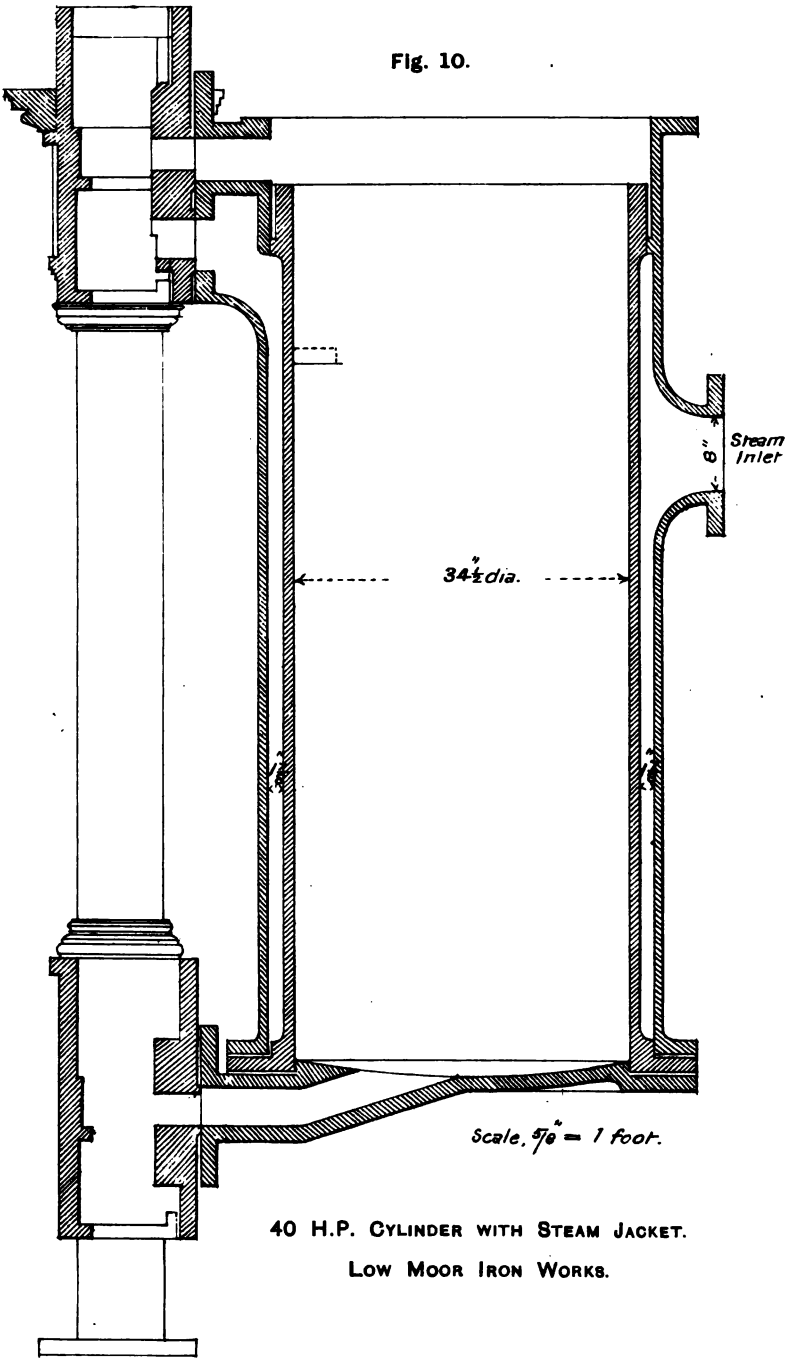

40 H.P. CYLINDER WITH STEAM JACKET.

LOW MOOR IRON WORKS.

UNIV. OF MICH.

CYLINDER CONDENSATION.

Fig. 11.

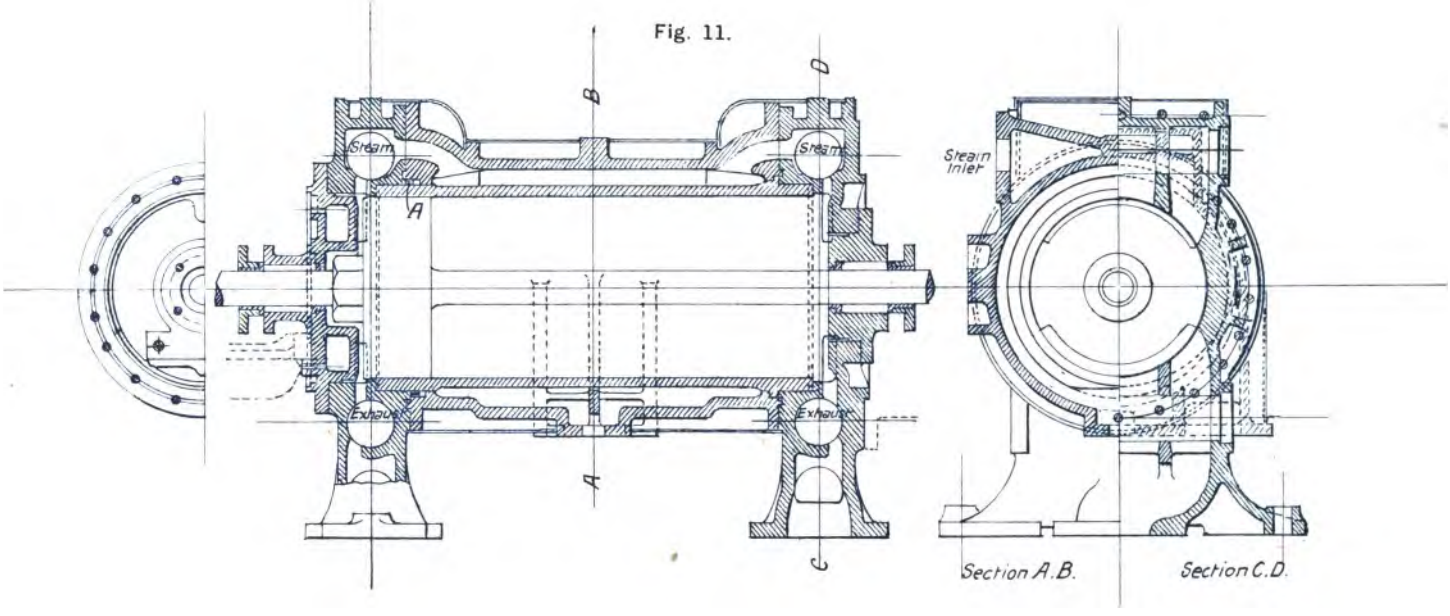

JACKETTED CYLINDER. HICK, HARGREAVES & CO., LTD., BOLTON.

UNIV. OF MINN.

CYLINDER C

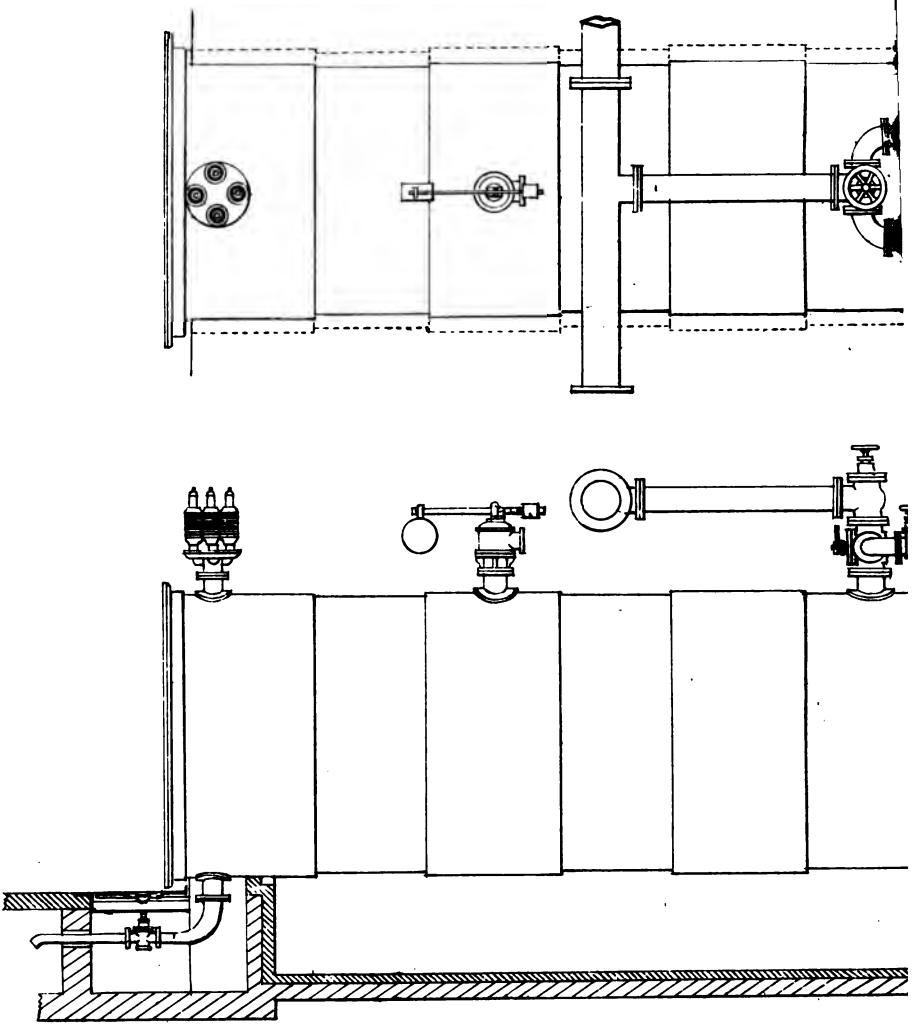

IMPROVED SUPERHEATING APPARAT

HICK, HARGREAV

NDENSATION.

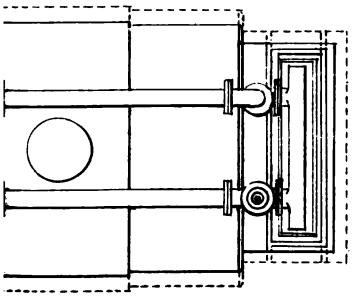

Fig. 12.

Scale, 3/16ths" = 1 foot

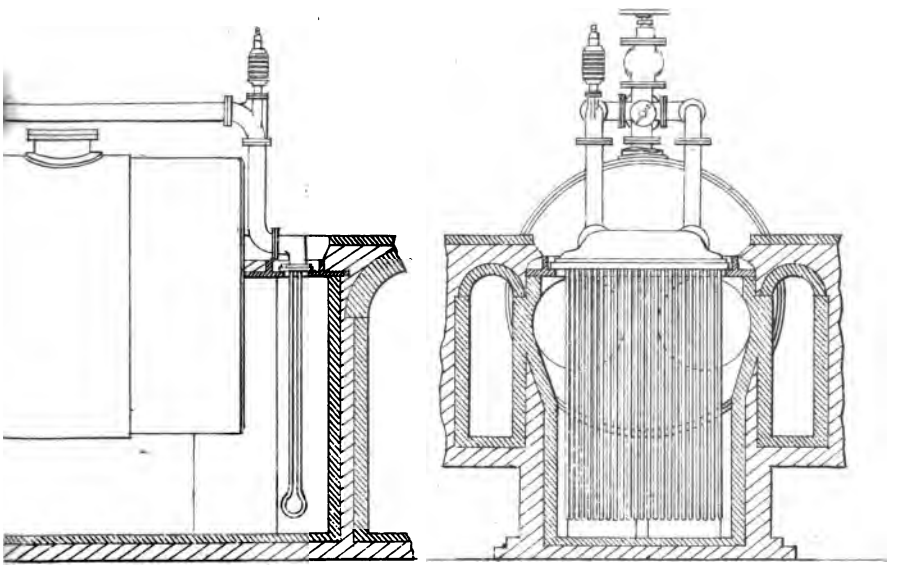

APPLIED TO A LANCASHIRE BOILER.

& CO., LTD., BOLTON.

UNIV. OF MICH.

CYLINDER CONDENSATION.

Fig. 11.

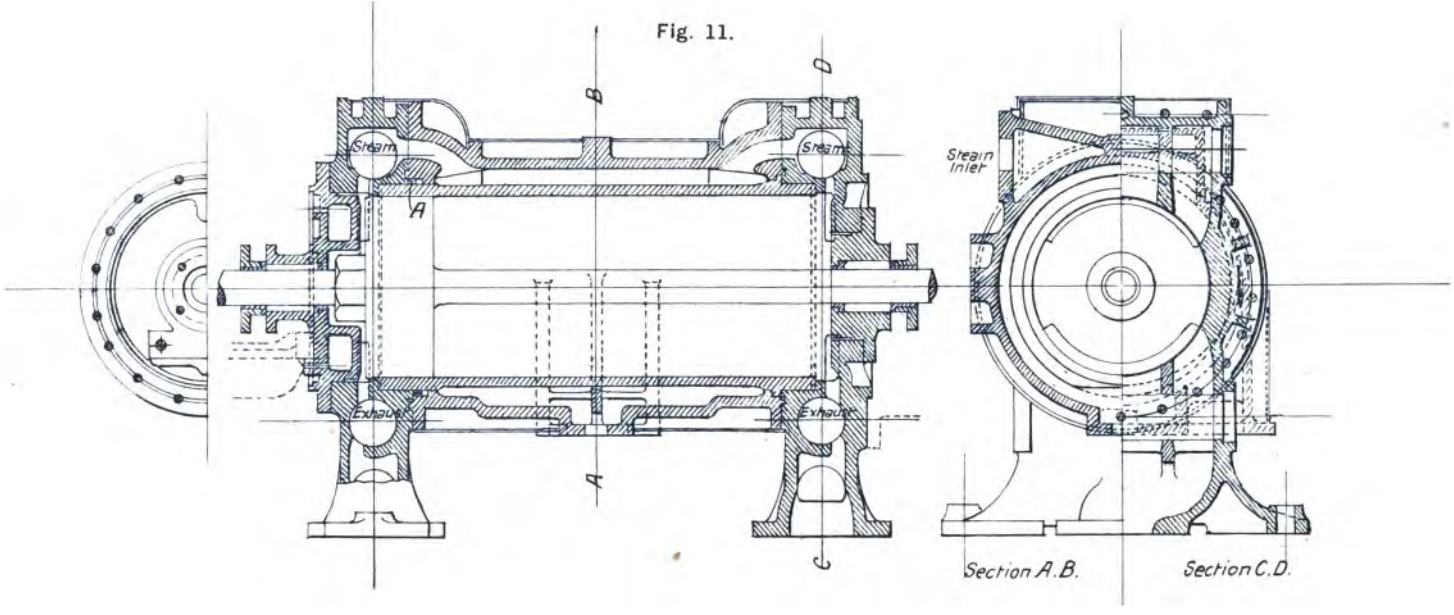

JACKETTED CYLINDER. HICK, HARGREAVES & CO., LTD., BOLTON.

UNIV. OF MINN.

NDENSATION.

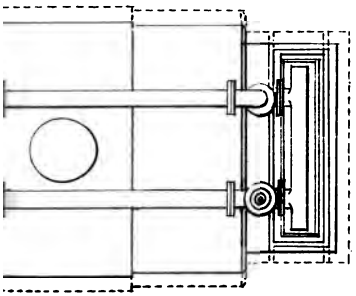

Fig. 12.

Scale, 3/16ths" = 1 foot.

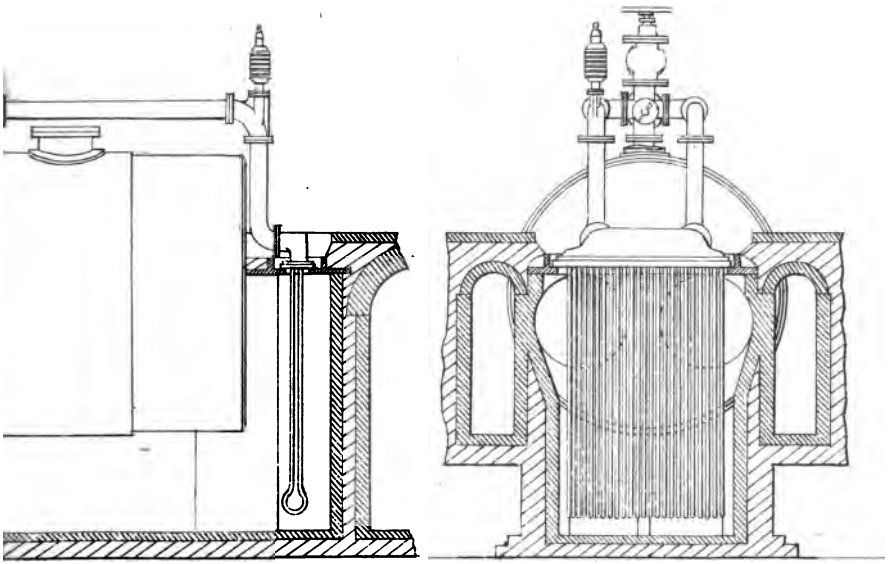

APPLIED TO A LANCASHIRE BOILER.

& CO., LTD., BOLTON.

UNIV. OF MICH.

CYLINDER C

Fig

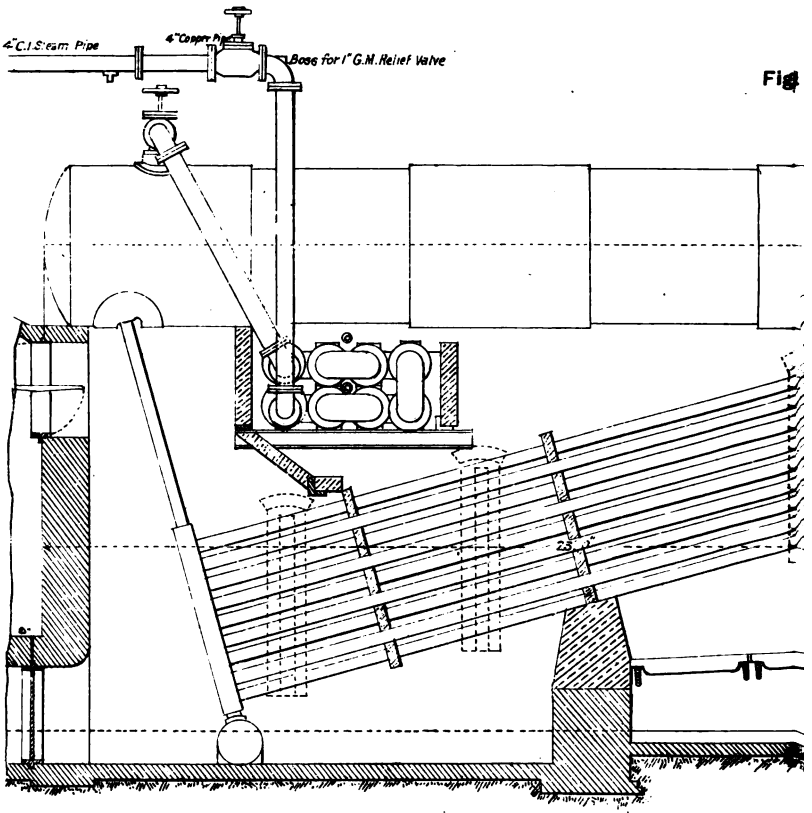

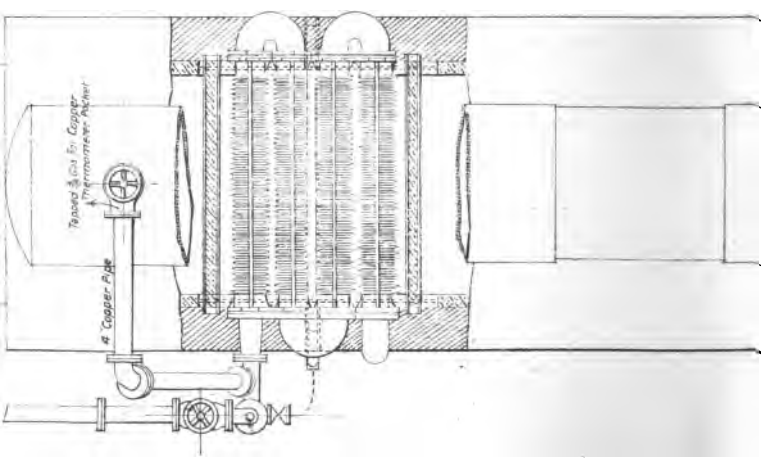

NDENSATION.

13.

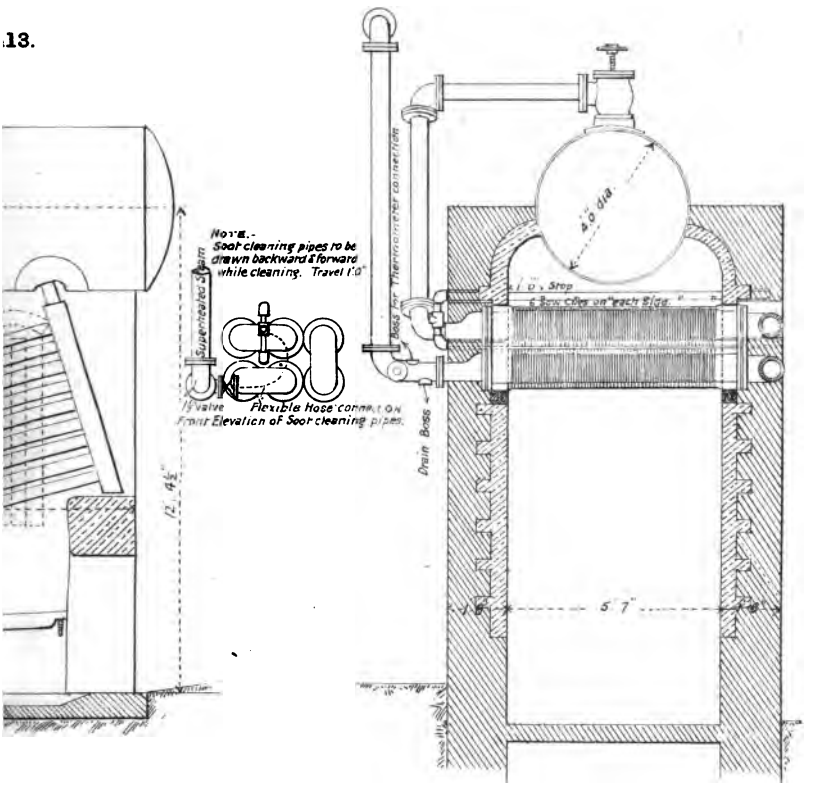

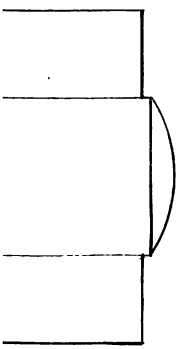

SCHWOERER SUPERHEATER,

AS APPLIED TO A BABCOCK & WILCOX BOILER.

UNIV. OF MICH.

CYLINDER C(

Fig. 14.

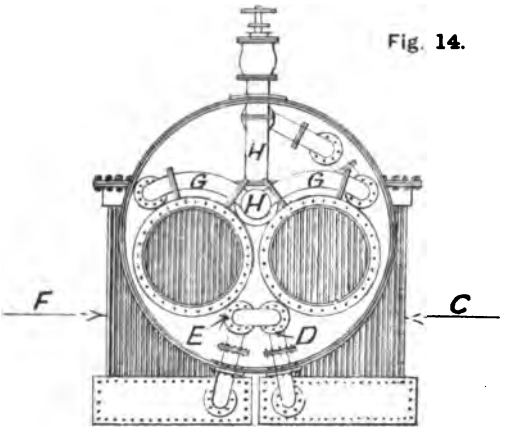

SECTIONAL ELEVATION AT A, B.

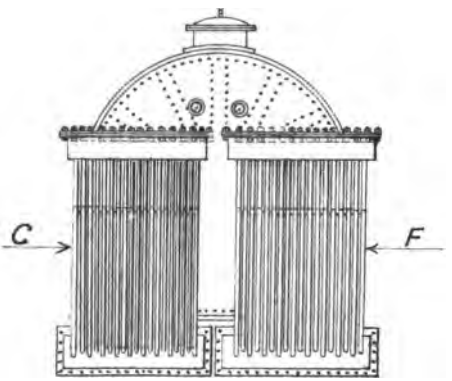

ELEVATION OF BACK END.

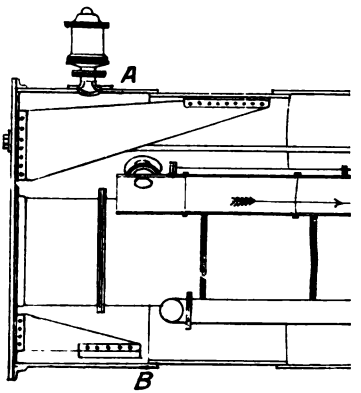

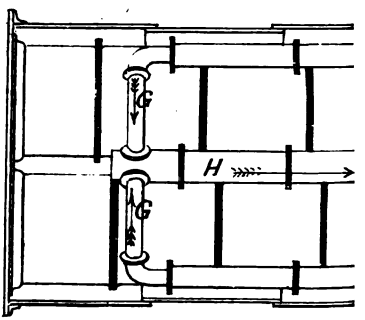

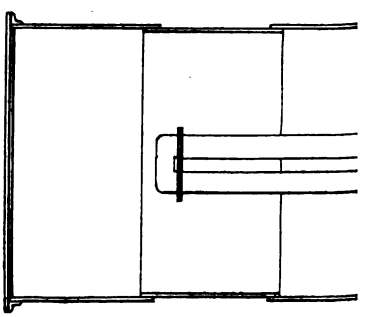

SECT

DESCRIPTION.

The steam is conveyed from the anti-priming pipe L, by means of pipes A, into a superheater C, placed at the rear end of the boiler in the external flue, where the temperature is much higher than that of the steam within the boiler; the steam is therein surcharged with heat by the heated gases which impinge upon the superheater. The steam then passes out of the superheater C, through pipes D and E, into and along the boiler towards the front end and back below the flue tubes, that is to say, in the coldest part of the boiler, and imparts some of the surcharged heat to the water surrounding the pipes D and E, along which latter pipe the steam returns at the same level to a second superheater F, placed alongside the first-named superheater.

The steam is here again surcharged by being subjected to the higher temperature of the gases. By means of pipes G, the steam is then again conveyed into the boiler and towards the front end thereof, but this time above the flue tubes, still however, below the water level, and is returned to the stop valve by the pipes H. It thus again imparts some of the surcharged heat to the water through the pipes G and H.

Mc.PHAIL & SIMPSON'S DRY STEAM GENERA

NDENSATION.

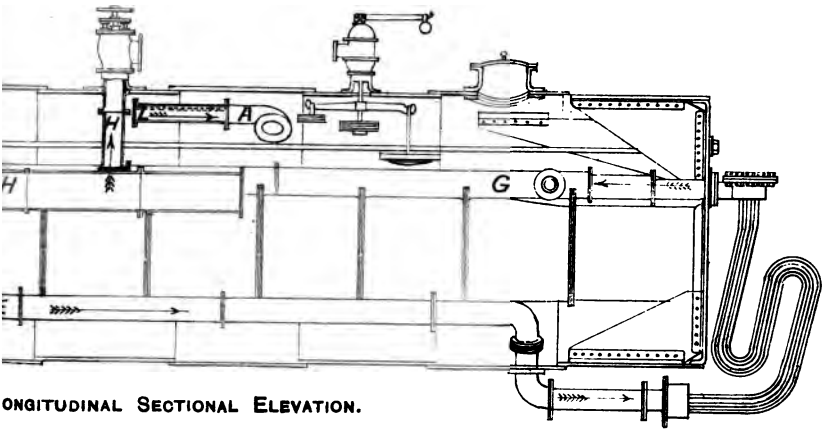

ONGITUDINAL SECTIONAL ELEVATION.

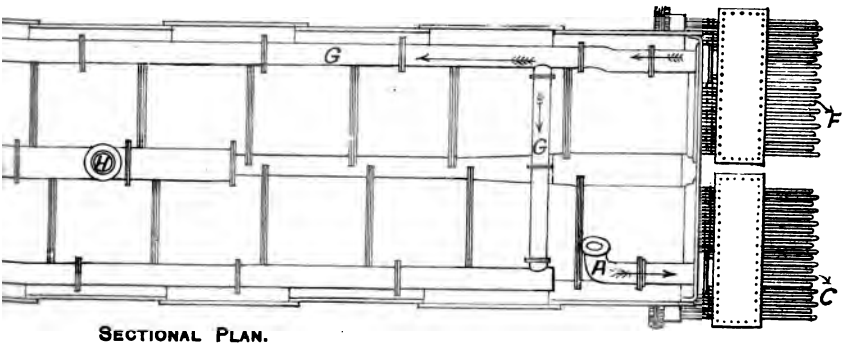

SECTIONAL PLAN.

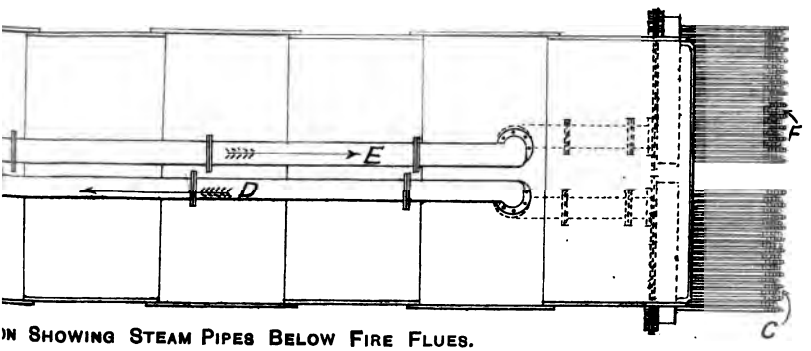

ON SHOWING STEAM PIPES BELOW FIRE FLUES.

OR AS APPLIED TO A LANCASHIRE BOILER.

Scale - 3/16ths" = 1 Foot.

UNIV. OF MICH.

PISTONS AND PISTON VALVES.

READ SATURDAY, NOVEMBER 9TH, 1895,

BY

MR. JOS. BUTTERWORTH, M.I.MECH.E.,

MANCHESTER.

The Steam Engine Piston seems to be neglected in current Engineering Literature. There are several works devoted to valve gears, also to cylinders and cylinder condensation; different designs of engines also form the ground work of several books, but the piston takes a very subsidiary part in all. The present paper therefore will, it is hoped, receive your careful consideration, and evoke profitable discussion.

In order to thoroughly appreciate the various designs at present in use, it is desirable to commence with the earliest forms of steam engines, viz.:—those deriving power from a vacuum only. These were fitted with wooden pistons bound or shod with an iron rim, and were usually fitted with a leather washer on the top side, which curled up against the cylinder and formed a shallow cup which was filled with water. Although very defective, this form was made up to 74in. dia., a cylinder of the size mentioned being cast by Messrs. Newcomen and Cawley in 1768 for the Walker Colliery, Newcastle-on-Tyne. It is described in the specification as bored true and polished, and it may reasonably be assumed that the piston would be a fairly good fit to start with, the trouble commencing when the piston began to warp and wear, as it had no adjustability whatever. Between the above date and 1793 several pistons were made, having a recess in the rim packed with gaskin and similar material of an elastic nature to take up the wear. In

the year mentioned a patent No. 1943 was taken out by a Mr. Pill for a method of adjusting the packing to allow for wear which would compare favourably with many modern specifications.

The illustration, Fig. 1, Plate 1, is copied from the original drawing accompanying the specification and resembles some types of piston valves at present in use. Three years later a piston is described which has a spring placed behind the packing so as to automatically take up the wear. In 1797 Cartwright described a piston made entirely of metal, without any hemp packing, but the drawing and description are not sufficiently lucid to allow any opinion to be formed as to its merits. In 1802 a metallic ring forced against the cylinder by elastic packing is found for the first time, and Sharples who took out a patent for same No. 2599, seems to be the forerunner of numerous inventors, each aiming to design an elastic piston, which would be perfectly steam tight against the increasing pressures of steam, and work with the minimum of friction.

A few years later the prototype of the Ramsbottom ring was made as follows:—An elastic metallic ring is accurately turned, ground and cut, so as to spring outward to a larger diameter, a plate covering the joint in the rings is also shown, and a wedge piece forced in the joint by a screw to assist the ring to take up wear; there are thousands of pistons at work to-day made substantially as indicated in this patent, and an average person viewing the matter from this standpoint, must come to the conclusion that this particular detail of the steam engine has not made much progress during the last 80 years.

The first tangible advance towards a scientific solution of the problem was made by Mr. Ramsbottom, who describes a machine shown, Fig. 2, Plate 2, by means of which the exact form of ring necessary for giving an even outward pressure on the cylinder

when forced into same, can be determined. At equal distances cords are attached to the ring to be tested, and are led over small pulleys so arranged that the cords all pull from the centre; if a number of equal weights be attached to the cords it will be seen that the spring will be opened by an outward force, which is approximately equal all round the same. A ring is then sprung outward so as to assume the shape thus determined, and cords are attached to it as before, but led over pulleys placed inside the ring, equal weights being again attached to the cords, so as to just close the joint of the ring and, if the latter has been sprung to the correct shape, it will now be perfectly circular. The amount of pressure necessary to make the rings steam-tight was found to be about 3lbs. per square inch of bearing surface on the cylinder.

I believe it is owing to the fact that the matter was approached in a methodical manner, when the above ring was introduced, that enabled it to obtain such a preponderating share in the piston packings at present in use.

In taking a general survey of the various designs of pistons invented from time to time, one curious feature appears to stand out most prominently, namely:—one half the designers seem to go to an infinitude of trouble to keep the steam from the space behind the piston packing, and the other half are just as anxious to get it there, an anomaly which is quite as pronounced to-day as it was 50 years ago. The cause seems to be that there is no generally accepted theory as to the actual conditions under which piston packings work. Assuming a well made modern piston in which the piston rings are forced against the sides of the recess in same, and are provided with good stopping pieces for the joints, so as to exclude the steam as much as possible from behind the rings; the continued working of the engine would soon produce an atmosphere of steam behind them equal to the average pressure of steam in the

cylinder; a conclusion that will be taken for granted when it is seen that the smallest imaginable leakage occurring would by gradual growth eventually reach a point at which the leakage from the recess must equal the leakage into it, which would evidently be the mean pressure of the steam in the cylinder. Notwithstanding this it is quite possible to force the rings from the cylinder walls and make them pass steam, even when the pressure of steam behind the rings is assisted by a strong spring, the result being to produce a clapping sound at the ends of the stroke of the engine. It is thus evident that there must be some strong power acting to force the rings from the cylinder, and this can only be explained by reverting to the laws of fluid pressure. As all cylinders are lubricated to some extent it may be taken for granted that there will be a film of oil on the same. At the speed pistons travel, the inertia of the oil will prevent its being scraped off by the rings and they consequently ride over it.

This point is shown in Fig. 8, Plate 8, where the film of oil F is exaggerated in size in order to make clear the part it takes in collapsing the rings. Any pressure placed on a fluid is transmitted by it in all directions, and when the steam pressure acts on the surface of the oil film it is transmitted to the face of the rings and that part of the cylinder opposite.

Owing to the extreme thinness of the film this action will to some extent be neutralized by capillary attraction and friction between the surfaces, but the result will, no doubt, be to give a diagram of collapsing pressure as shown in Fig. 4, Plate 4, under the most favourable circumstances for producing it. The height of the figure would be reduced and equalised proportionately to the thinness of the film between the rings and the cylinder. Given a constant thickness of the oil film, which will generally be obtained where the sight-feed lubricator is used, the collapsing pressure will vary with, and possibly equal, but

cannot exceed the mean of the pressures on each side of the piston diagrams; Fig. 5, Plate 4, and Fig. 6, Plate 5, give this variation in the high and low pressure cylinders of an ordinary compound engine. They are obtained by taking the mean of the pressures on each side of the piston at several parts of its stroke; a curve is then drawn through the points thus obtained, and if the engine is working under a constant load the diagrams of each succeeding stroke will be alike. It will be noticed that the curve commences and finishes at the same pressure, so that there is no sudden change of pressure on the face of the rings. At the same time it is probable that capillary attraction interferes very much with the actual amount of collapsing pressure, tending to lessen it and also the amount of variation.

Having thus stated a probable theory as to the conditions under which piston packings work, it is proposed to examine the various methods adopted to meet same in different types of Pistons.

The first type of Piston in which gaskin or similar packing was used could scarcely be said to work under the conditions mentioned, being of a fibrous nature at first, and afterwards becoming a solid mass with little or no tendency to fill the cylinder.

Coming to the simplest form of metallic ring, as patented in 1815, and elaborated in later years by Mr. Ramsbottom, we find there is no provision made for taking up the wear between the edges of the ring and the sides of the groove in the piston, consequently the steam has practically free access to the back of same, and this added to the pressure due to the spring in the ring, soon causes considerable wear, especially if all the rings are in one groove, or where only two are used. If four or more rings fitted in separate grooves are used, the wear is very much reduced, owing to the balancing pressure on the face of each ring approximating more closely to the pressure behind same.

That this is the case may be proved from the following:—each ring does its share towards preventing leakage, and in so doing stores up the steam as it were, between itself and those rings which are nearest to the pressure side of the piston. If the rings do equal work in preventing leakage, and assuming that the piston is steam tight, the fall of pressure between each ring $= \frac{p}{n-1}$, where p is the difference in the pressure on the opposite sides of the piston and n the number of rings.

Referring to the theory just enunciated respecting the pressure transmitted to the face of the rings, it will be apparent that the smaller the fall of pressure between each pair of rings or, in other words, the more the steam is dammed up the greater will be the pressure transmitted by the oil film to the face of rings and tending to balance same. Perhaps the best example of this is in the ordinary gas engine piston which is more severely taxed than the steam engine piston, yet can be kept fairly tight for years if well cleaned at frequent intervals.

The next type of Piston packing which received the attention of steam engine designers took the form of segments and wedges of every conceivable shape, but mostly arranged as in Fig. 1, Plate 1, so that they could be adjusted without removing the junk ring. The absurd length to which this type was carried may be gauged from the fact that one made on this principle had four segments, eight plates, ten wedges, eight springs, fourteen pivots, one cam and a conical ring, together with a body which was bound together by five grooved embossments. Its lack of elasticity and complication no doubt led to its abandonment, and the segment ring is now less in evidence than any other type. It would therefore be useless to examine the conditions under which it works, although it has doubtless served its purpose in giving ideas to makers of metallic packings for piston rods.

The piston packing invented in 1838 by Mr. Goodfellow may fairly lay claim to be considered the forerunner of the modern type of piston. It consisted of two outer rings or castings bevelled on their inner edges, and enclosing an inner ring having saw-gates cut on its outer surface to render it pliable. The latter was also bevelled to suit the casings, thus giving an outward pressure to the cylinder walls together with a pressure tending to keep the rings a tight fit in the recess in piston, and if properly proportioned would, no doubt, give a fairly steam-tight and elastic piston.

The aim of Engineers generally seems to have been directed towards compassing the results obtained by Mr. Goodfellow, by means of a spring or springs of various forms, and although it may be said that thousands of various kinds and shapes have been designed, still few are agreed as to which is the best, or whether the best has yet to be invented, while others, though they are in a minority believe in steam packing behind the rings to obtain the same object.

Within the scope of the paper it would occupy too much time to examine even half the varieties which have been designed. It is proposed, therefore, to notice only the most common types in use at present, dividing them into two classes as above mentioned. Those which are steam packed have a great pressure behind the rings at the commencement of the stroke as will be seen from Fig. 7, Plate 5, in which the indicator diagram is superposed on Fig. 5, Plate 4, ordinates taken at any point of the shaded portion giving the *minimum* amount of pressure behind the rings at that instant. The result is that the cylinder is often found to wear larger at the ends than in the centre. Gas engine cylinders notably are affected very much from the above cause.

On the other hand, those which exclude the steam from behind the rings in a more or less perfect manner have a much

smaller positive net pressure behind and the negative pressure which occurs at the latter end of the stroke will nearly balance it, see diagram Fig. 8, Plate 5, in which the pressure of steam in the recess behind the rings is also superposed on Fig. 5, Plate 4.

The net amount of pressure exerted on the cylinder by the rings is thus nearly equal to that given by the spring.

Looking at the matter in a broad light, the fittest is bound to survive, and the above mentioned transition during every stroke from a positive to a negative pressure behind the rings, seems to account for the continued increase of those varieties of piston packings in which the spring gives the rings a strong pressure against the sides of the groove in the piston. The friction thus generated between the surfaces forms a kind of latent resistance to the motion of the rings, which would otherwise occur with every change in the balance of pressure on same. The spring at the same time has an active outward pressure tending to keep the piston steam-tight, and though the friction on the sides of the groove in the piston is sometimes so great that the spring scarcely seems to have any power to open out the rings when the piston is at rest and cold, the vibration always present in a running engine will cause the spring to exert its full force on them in the above direction.

The "Mather," "Buckley," "Lancaster" and similar pistons all act as above described, and as there are so many thousands in use a detailed description of each is omitted. If the most modern types of steam-packed pistons are examined, it will be found that attention is principally directed to minimising the pressure on the back of the rings by only exposing part of their surface to its action, as in Fig. 9, Plate 6, or by bevelling the back of the ring so that part of the steam pressure acts to force the ring against the side of the groove in which it works, as in Fig. 10, Plate 6.

There is another aspect of the subject, namely, the manufacture of piston packings, which has not yet been noticed, if the mention of Mr. Ramsbottom's apparatus is excepted. No hard line can be laid down as to materials, as they have to be altered to suit different conditions, and it is not intended to detail the manufacture of one type to the exclusion of others, but generally speaking, it is of the utmost importance that the parts be as few as possible, and few pistons are at present made with more than two casings or rings and one spring. The spring should also have a good bearing surface on each ring, otherwise its inertia will cause it to chafe at each end of the reciprocating motion of the piston.

Another feature which seems to bear out the theories given as to the conditions under which piston rings work is the tendency towards narrower rings; the narrower they are, the less total negative and positive pressure is exerted on them by the steam, consequently a weaker spring is required, and packing friction is thus reduced in proportion to the width. Again it enables the narrowest width of block consistent with strength to be used, as if the width is kept up it increases the amount of bearing surface on the piston block. The stopping pieces which cover the joints of the rings should also be ledged or otherwise arranged, so that it is impossible for them to work out, in addition to which they are less liable to wear if fastened at one end to the ring. The mention of bearing surface brings up the vexed question of tail rods. If a piston fitted with tail rod be taken out of its cylinder and placed on two supports, one to take the place of the crosshead and the other that of the tail slide block, it will be found that the rod is bent from $\frac{1}{16}$in. in the small sizes up to $\frac{3}{8}$in. in the cases of large pistons and long rods. A cylinder must thus wear to the amount stated before the weight of the piston can be taken by the slide on which the tail rod rests. This is no new theory, as it has been

arranged for in many cases by cambering or bending the rod, so that when placed on two supports with the piston in position it lay perfectly straight; at the same time, hundreds of tail rods have been fitted just as they came from the lathe, and have very often brought the appliance into disrepute.

Owing to the necessity for providing sufficient bearing, pistons are seldom found so narrow as to be weak, still there is plenty of room for improvement in their general design. They must be as light as possible. A common fault in coring them is to form a thick rib opposite every bolt where one opposite every other bolt would do. In coring out the piston the air should be got out, and the cores supported at prints placed on the face, against which the junk cover bolts, and between each bolt hole. The cover makes up these holes when in position, and no plugs are needed, a fruitful source of breakdowns being thus avoided.

Just recently at least one engine has smashed in Manchester, owing to a screwed plug working out and getting between the piston head and cylinder cover. In casting the larger pistons care should be taken to cool the centre first, or a cracked piston will be the result when the rod is forced in.

The methods by which pistons are fastened to their rods are like the packings, various, but the only two which are extensively used are the nut or the cotter. In both cases the taper of the hole in the piston should not be less than 1in. to the foot, otherwise it may split same, and is liable to gall and fasten if driven thoroughly home.

In cases where very wide pistons are used, rather than decrease the above rate of taper it is advisable to taper half only of the hole, leaving the remainder parallel. If a nut be used to fasten the piston to its rod, it should always be secured either by a good sized copper pin through both nut and rod, or by some other good method of nut fastening.

If a cotter be used the worst possible method is to make the cotter hole through the centre of the width of the piston, as the cotter has to be so long that it cannot be removed unless the piston is clean out of the cylinder, and it is also liable to work loose and get on the back of the rings. The proper method is to slot into the piston from the small end of hole in same, which is almost invariably the junk cover end, by so doing the cotter is easily got at, and when the junk cover is in position it effectually prevents the cotter working loose.

Looking forward it is probable the nut will yet be the only recognized fastening, as in all probability the cast iron piston will be supplanted by the mild steel one, the most convenient form of which is a flat truncated cone, and which is most suitably fastened with a nut; its introduction into land practice will be deferred till steam engine makers jacket all their cylinder covers, and thus do away with the injurious effect of the increased surface involved in the use of the above form of piston.

Turning from the piston to the piston valve a different set of conditions are met with.

Reverting to the theories stated respecting the action of rings working in the cylinder: in this case, the pressure behind the rings is easily determined as it is nearly constant on each side of same, the boiler pressure being on one side and the exhaust pressure on the other, so that the probable pressure behind the rings, if these are well fitted, will be the mean of the two mentioned. On the outside the pressure will be constant and, as shown in Fig. 4, Plate 4, where p and p^1 represent the pressures on the opposite edges of the rings when the latter are not working over ports. Immediately the rings come over the port they get the full boiler pressure on the outside if opened to steam, and the exhaust pressure when opened to exhaust. The variation in pressure is thus very large, much larger in fact

than with steam-packed rings when working in the cylinder, and special precautions have to be adopted to combat same.

The first type of piston valve as made by Barton in 1816 had no provision for taking up the wear and would probably be abandoned on account of leakage. Several attempts were made to utilize the piston valve after the date mentioned, and its advantages seemed to be fully appreciated, one engineer urging its use on account of its perfectly balanced properties, possessed by no other form, also its great length of cut-off edge compared with the size of valve used. Other advantages are that it is easily lengthened so as to render the ports as short as possible, no more machine work being entailed than when the valve is made in its shortest form, also, if good tools are employed the whole of the work may be done in the lathe and expensive hand work done away with.

The first successful type of piston valve, was that invented by McNaught, of Rochdale, in 1850, and may be said to take the lead of other types of valves in most particulars. One piston valve controls the admission, cut-off, release and compression, and in fact fulfils the duties performed by four valves of the "Corliss" type. In addition, it is positive in its motion, which is derived from an eccentric as regards the longitudinal motion, and from a cam as regards its twist motion, which latter determines the point of cut-off, the other duties being performed by the longitudinal motion. The shape of the valve is well known to engineers, and has similar ports in both valve and valve box. The cut-off is very rapid, and acts in a similar manner to the ordinary grid slide valve. Adjustment to provide for wear is made by means of a screw and bridle, acting as a wedge to increase the diameter of the valve.

Since the above valve was first made, few attempts have been made to adopt the piston valve by land engineers, probably owing to the difficulty experienced in keeping it steam-tight.

On the other hand they are very largely used in Marine practice, the low-pressure cylinders having two valves as a rule so as to give a large area of ports compared with the size of the valve. The packing for them is shown Figs. 11 and 12, Plate 7, and consists of a ring furnished with inside lugs; a piece is shaped out between the latter and a strip of brass fitted in the space thus left. As the ring wears, the brass is taken out and its thickness augmented by sheet tin or other material, and the bolts screwed up tight, making the ring a solid block slightly larger in diameter.

The Willans engine also distributes its steam by means of a piston valve, which is kept tight by the use of rings springing inward and very like an ordinary Ramsbottom ring. Here again is an example of the extraordinary simplicity of the piston valve as compared with others. One valve controls the steam and exhaust for three cylinders and is worked by a single eccentric.

In recent practice it has been found possible to make a packing for piston valves which shall be capable of resisting the great collapsing pressure thrown on same when working over ports, and at the same time only exert a moderate pressure on the valve box and sides of groove in piston valve.

The result might be attained by making the rings so tight in their grooves, that the collapsing pressure would not effect them, but owing to the excessive amount of the latter, the rings would be so tight that the spring would have no effect on them whatever, and consequently no automatic adjustment for wear would take place. The required effect can only be obtained by creating the desired amount of latent friction in the spring itself.

The principle involved in doing so is similar to that which takes place when a rope is coiled round a hydraulic capstan. If the rope goes only once, or even twice, round the capstan, the hauling power is but little more than the pull exerted by the

man. If it is coiled three or four or more times round, the friction is enormously increased at each turn, and renders it quite possible for the man to pull 100 tons along.

Here then is the principle which must be applied to the piston spring. When it is coiled only once or twice round inside the piston rings, the resistance to collapse will practically equal the outward pressure exerted by the spring, but if coiled say six or seven times round, as shown in Fig. 13 and 14, Plate 7, the resistance to collapse will be enormous, compared with the active outward pressure exerted by the spring.

It may be asked, "how can this be proved?" In estimating the strength of a boiler it is well known that the total sum of the outward forces acting along either half of its circular section, when resolved at right angles to any line passing across the centre of the section, are equal in amount to the length of the line. In other words, if "D" be the internal diameter, and $f\,t$ the strength of the boiler shell, while p represents the bursting pressure, then $2ft. = D\,p$.

In the same manner, if a set of piston rings be encircled by a clip in halves, as shown in Fig. 15, Plate 8, and two spring balances be employed as shown, the sum of the pressures registered by these will represent the pressure exerted by the rings on the inside of each half of the clip, or, as the pressures are bound to be equal in each balance, four times the pressure registered by one gives the total outward pressure exerted by the spring inside the rings.

A more convenient form of testing apparatus is shown, Fig. 16, Plate 8, only one balance is used, and, as in large pistons, the force to be measured is very considerable; a pair of tongs are introduced, to give the balance a leverage of $\frac{T}{t}$ times the actual force exerted to close the testing clip, where T = the long end, and t the short end of the steel yard formed by the

tongs. If the apparatus be applied to a set of rings having a coil suitable for resisting collapsing pressure as required for piston valves, it will be found that on tightening the spring balance so as to close the rings, a very great pressure will be registered before the joint A is closed. On slackening the balance it will be found that the index will come down to a very moderate amount before the joints begin to open again. The difference thus obtained between the maximum pressures needed to close the joints of the rings, and the point to which the balance falls before the joint begins to open out, gives the amount of the friction generated by the spring.

It is found that a resistance to collapse of 200lbs. to the square inch can be combined with an active outward pressure of less than 2lbs. per square inch; this is sufficient for all practical purposes, and if care is taken in fitting the rings to the valve no trouble need be encountered in working after the rings get thoroughly bedded to the valve box, after which there will be less wear and tear in connection with them than with any other form of valve. Figs. 17 and 18, Plate 9, show an ordinary cylinder fitted with a piston valve having an internal cut-off piston valve working through same; it will be noticed that there is a very small clearance between the main and cut-off valves, and the connections to the eccentrics are exactly as with ordinary slide valves.

In conclusion the author thinks that enough has been said to show that the subject of piston and piston valve packings is at present in a rather obscure state, and it is the desire of the writer to provoke discussion on it, in the hope that others may be led either to study the question more closely, or to put the result of their observations and experience in a concise and methodical form for the use of engineers generally.

It is not of very great moment perhaps to feel sure that one's theories agree with others. But it is an almost essential point

that a theory of some kind be adopted in making a research, otherwise one appears to be wandering aimlessly, and is unable to classify the various data which come into his possession.

DISCUSSION.

The CHAIRMAN (Mr. T. Daniels) in opening the discussion said they were all more or less familiar with the question brought forward by Mr. Butterworth, and he was sure they would not need pressing to give their opinion upon the very interesting paper which had been read. The question was a very important one, and there was no doubt the piston valve had been too much neglected. As long as the piston worked all right, they had thought the slide valve should work along with it, but they were now beginning to see the piston valve was quite possible. It was now being adopted and brought into pretty general use, as for instance by locomotive engineers, who were using it to a considerable extent. It had been tried many years ago by Mr. Beattie, on the L. & S. W. Ry., but did not seem to work very well, and was given up. At the present time Mr. Webb and others were trying it, and were, he understood, getting it somewhere near perfection. The circular valve was in 1854-5 put into Nasmyth's old steam hammer by Mr. Robert Wilson, and it immediately did away with the screw and hand motion which they had seen on these old hammers. By using the small circular valve, a man could manipulate it, and work the whole apparatus to a nicety. It made a wonderful change, and he believed Mr. Wilson claimed the invention ascribed to Mr. Corliss. A great deal might be said as to the durability of circular valves, and he might add that his firm had taken a great many slides off hammers at iron and steel works, and put on circular valves. With regard to having steam

behind the piston rings, McConnell was, he believed, one of the first to put it in that way in his locomotives, and he had seen it himself in 1856 when he was a boy. The pistons were working with steam behind the rings, which were made on a roll, something like the Ramsbottom rings. The rings worked very well, and could be put in any kind of cylinder.

Mr. George Saxon said the paper ought to give rise to a very profitable discussion. Mr. Butterworth, he supposed, considered the manufacture of pistons quite perfect, or else he would not have started the theory about the film of oil. The film of oil must be so very infinitesimal, being put into the cylinder by a sight-feed, drop by drop, every second or so, that they could hardly attribute the clapping action to it. The knocking of the ring at the end of the stroke appeared to be due to some other cause. In his opinion, the cause probably lay in the fact that, as the piston which was able to pass steam behind the rings got to the end of the stroke, the pressure behind the rings was reduced to its lowest point, as well as the steam behind the piston. Then the stroke was reversed, and the full pressure of steam put against the piston, which would, he thought, amply account for the clapping of the rings; unless, indeed, it was caused by a ledge at the edge of the cylinder, or by coming over the ports, as occured in some defective cylinders. In proposing the film of oil theory the author seemed to him to be running the matter to such a fine point, that if they could only account for the clapping by such a small thing as that, they had now got a practically perfect piston, and engineers would have a very heavy task to improve upon it. No doubt they often wished they could look inside a cylinder and see how it was working. An improvement in piston packing that had come before his notice recently appeared to have exceptional merit. It consisted of two springs placed together in the rings in such a manner

that the springs formed a kind of hinge, giving, according to adjustment, more or less vertical and outward pressure to the rings. He did not think they had got to quite the highest point in the manufacture of pistons, and no doubt, the experiments that were being carried on by the best makers would result in a further improved type being brought out before long.

Mr. JOHN TAYLOR questioned whether there was a real necessity for any packing, and thought engineers should be given credit for the invention of tools by which they could bore out almost perfectly true cylinders. More money had been wasted in connection with springs, &c., for pistons than in any other article in engineering practice. The best way was to get a cylinder as true as possible and put something in it that would just move, and then they would have the best piston obtainable. The making of packings, &c., was simply trying to make up for the imperfect boring of the cylinder. Twenty years ago he adopted a plan of putting in cylinders up to 12in. diameter without any packings. He took care to have the cylinder as parallel as possible, and that in fitting the piston there should be no slackness in any way. If such occurred, a new boring was made, and he found he could run engines with a third more power, without packing springs, than he could with them. In cylinders up to 18in. diameter, a plain piston with two or three grooves to carry the lubricant was the best. In his opinion there was no virtue at all in having rings for small cylinders. They should get the best power out of their engines they could, until the cylinders showed signs of wear, and then re-bore them. Great progress had been made in the true boring of cylinders and finding pistons to fit them well, independent of packing rings, &c. He was glad to see that the author had given Mr. McNaught credit for his valve. He had worked one for twelve years, without it showing any sign of deterioration, the piston

being the best he had seen for maintaining a true position. It had two actions—a vertical and a twisting action, which was the right thing for keeping it straight. He did not know of any valve to-day working so well as McNaught's. There was no direct pressure in it, and the mechanical construction was better than in any other with which he was acquainted.

Mr. Alfred Saxon did not agree with Mr. Taylor's animadversions on the question of packings, which were almost as necessary in the small as in the larger sizes of pistons. His excuse for speaking was that their firm originally started as piston makers. An engineer who had not his own patent piston was free to recommend to a customer what he thought was the best piston. Speaking from his own experience, he would not recommend an adjustable piston, such as the Lancaster or the Buckley, where there was a careless engine attendant. The engine attendants should know the nature of the different types of piston, and be able to examine and clean them. If they placed such a piston in the hands of a careless attendant it would give worse results, after a time, than other types, as for instance, the "Mather." Supposing, however, he was asked which was the best, and it was to be under the supervision of a skilled and competent engineer, he would advise the adoption of an adjustable piston. There were several points to be considered in connection with piston manufacture and working. One was economy, that was, steam-tightness with the least amount of fricton. Others were the durability of the piston, simplicity of construction, and safety in working. With reference to the theory of the film of oil which the author had given them, he certainly could not see it himself, but still he looked upon it in another or an "extra" light to that in which his brother had done. It was well known that makers of adjustable piston packings told their customers that they could

put their piston rings in an old cylinder, sometimes when the cylinder was so badly worn as to require re-boring. In such cases there was no wonder that where new packings were applied, there was room for this film of oil, sufficient to allow the fluid pressure to take effect in the manner described by the author. But assuming the case of a newly bored cylinder and piston, there would scarcely be any collapsing such as had been referred to, unless it was owing to some defect in the construction, as had already been pointed out. He had himself come across cases in which there had been this clapping of the rings in the cylinder, but had attributed it to the fact that the rings worked round gradually and got into different positions in the cylinder. This might arise from a difference in the shape of the cylinder in various parts of it. There was such a small amount of oil used per stroke from sight-feed and other drop lubricators that it could scarcely be sufficient to account for the clapping, which was due rather to untrue cylinders, and the rings working round to a position in which they had not bedded themselves. Another reason that might be given was that in the changing or reversing at the end of the stroke, particularly in high speed engines, this result might be caused. The author told them in one paragraph that there were thousands of a particular kind of piston in use to-day, viz: the one constructed with wedge adjustment; he (Mr. Saxon) did not think there was. It would be a great surprise to him if he should find that there were thousands of that type in use. Then the author said it was owing to the fact that Ramsbottom approached the matter in a methodical manner that his ring became generally used. In the speaker's opinion, it did not matter how methodically he approached the subject if the principle was not a good one. He quite agreed as to the leakage of steam inside the piston being equal to the average pressure of the steam inside the cylinder. Messrs. Buckley, of Sheffield, had constructed an engine to test

this, and had a hollow piston rod and a steam guage fixed on the end of the piston rod. The results bore out the author's statement, so that he thought his diagrams might be taken as correct. Another important question which had received a good deal of attention was that of tail rods, but the author seemed to have overlooked one point in connection with it. He asked them to take a piston and support it on two supports, one to take the place of the crosshead and the other that of the tail slide block, and see what the deflection was. The author, however, did not take into account that under ordinary circumstances the piston rod was supported in the glands, and the deflection was not as great as stated. In cases where metallic packings were used, as in the United States, and similar designs, the deflection could be taken as pointed out by the author, but with regard to cambering the rod, it was not worth, in his opinion, the while of practical engineers to go into the matter. The advice given by the author with regard to the construction of pistons was very acceptable. Every firm had ideas of its own which it did not communicate to others, but Mr. Butterworth had given them suggestions drawn from his own experience which the members could not but regard as valuable.

Mr. D. Fulton did not quite agree with Mr. Saxon in giving unqualified praise to the modesty of Mr. Butterworth, who, in his opinion, almost carried that virtue too far. To people like himself, who were not manufacturing engineers, a great deal of information and benefit would have been afforded if the author had given a full description of the particular piston in which he was interested, and then some other gentleman might have given them an account of the type to which he, in turn, pinned his faith. Thus the members would then have had the merits of both placed fully before them. With regard to one of the points raised by Mr. Saxon as to the glands being the points of

support, he (Mr. Fulton) did not think that should be so. He knew of many cases where the glands did not give any positive support at all, but were flexible and specially arranged to follow the oscillations of the piston rod.

Mr. W. H. Hunter said he wished to put a question as to the practical working of the piston valve, and as to the defects (if any) which the author or others present might have discovered in the working of any such valve as had come directly under his or their notice. This was a matter of practical importance to him. He was just now constructing at the Docks at Manchester, a new hydraulic installation. Some considerable difficulties had attended the undertaking, and it was consequently not in quite so forward a state as it might otherwise have been, but he hoped before many weeks or months were over to be able to ask the members to inspect the installation, and tell him what they thought about it. He was putting into that hydraulic installation at Mode Wheel two sets of triple expansion engines, which would, he believed, be excellent as regards workmanship, as they certainly were in their type and design. In connection with this plant, he had, after considerable investigation, determined to provide in the specification for the employment of piston valves on each of the high pressure cylinders. He had heard that night from one gentleman and another, including the Chairman, of the excellent results they had obtained in the working of these valves, but he would be pleased if someone could now tell him what difficulties, if any, there were in the working of piston valves, because if the reduced cost of maintenance and the efficiency, and other points were so entirely in the favour of these valves, he would like to know why they ever made valves of any other form. He was not referring to cases of small engines, in which the question of weight, space, &c., came into consideration.

He was simply asking was there anything behind, was there anything which those who used high pressure engines, who depended upon these engines for the conduct of their trade, had to dread in connection with these valves, and if not, why they as practical engineers, did not use them more generally than was apparently the case.

Mr. T. MANNOCK said (in reply to Mr. Hunter) there were several very good reasons why Lancashire Engineers did not adopt the piston valve. In the first place the corners of the ports were very liable to crack, and this might cause an accident if the rib caught the end of the packing ring, which was often very sharp from the effects of wear. Besides this, the packing rings were made practically solid by screwing up the joint with a packing piece between, as described by the author of the paper. In adjusting the fit of this packing piece so as to get the rings steam tight, while still sliding easily, there was always the possibility of making the pistons too tight, and so galling the surfaces and breaking the valve motion. If they were left slack enough to be safe, then they were not steam tight. Mr. Saxon had told them that it was ridiculous to expect a solid piston to remain steam tight, however well fitted in the first instance; and yet this was a solid piston which had only the one recommendation that it could be made larger when worn. They might make such a valve nearly steam tight for a limited time when working in a vertical position, but in a horizontal position it could not possibly remain tight on account of the side wear due to the weight. The casing would soon become oval and then no adjustment of the packing piece would be of any avail.

In Lancashire, the mill engines were nearly all of the horizontal type, and so if they adopted piston valves for them, they would have to be put in the very worst position a piston valve could be placed. Of course if the helical spring described

in the paper could be made to work it would do away with one very great objection to the piston valve. He (Mr. Mannock) had made piston valves with an ordinary Mather and Platt spring and two packing rings with a diagonal slit at the side. They were a steam tight job, but the corner of the slit which formed an acute angle got into trouble, and they had to be thrown away, and one packing ring substituted with the coil inside. This surmounted the trouble from breakage, but had no power of keeping the joint tight between piston body and packing ring. Therefore, this could not be considered a satisfactory arrangement.

If it were only desired to get a balanced valve there were plenty of slide and other valves which gave perfectly satisfactory results. There was Wilson and Child's valve, to which the Chairman had referred, as solving the problem of an easy working valve for steam hammers. He (Mr. Mannock) remembered a pair of these valves put in by Mr. Wilson when at Low Moor. The pin at the end of lever working the valve was made with a round knob upon it, and they could take hold of this knob and turn the pin round, while the engine was working under a high pressure of steam, showing there was very little friction upon the valve. How they were for being steam tight he could not say. There was also Mr. Wilson's slide valve with a saddle at the back, which was let down with a scraper until the valve could just slide without friction. He (Mr. Mannock), about 20 years ago, had designed four large winding engines for the Duke of Sutherland with valves of this type. They had answered very well indeed, and were so light to work that a boy of 12 years old reversed and handled the engines with ease at the official inspection, although they were the most powerful winding engines in this country at that time. Then there was Dawes and Holt's valve, with a relief frame at the back. He had made a great many of these from 1872 to 1878,

and they were working perfectly at the present time. The relief frame was something like a picture frame which worked against the inner surface of the valve chest cover and excluded the steam from the back of the valve. The frame was joined to the valve by a thin steel diaphragm which gave an elastic pressure to the frame, keeping it up against the valve chest cover and excluding the steam. A stop cock was screwed in the chest cover, which communicated with the cavity behind the valve, and with this cock open to the atmosphere there was only a small breath of steam visible, showing that the frames were quite efficient. Formerly the fatty acids of the lubricant used to destroy these thin steel diaphragms, but since the introduction of the improved mineral cylinder oils this trouble had disappeared, and they would now last as long as any other part of the cylinder mechanism. He mentioned these three types to show that a good balanced valve could be made without resorting to piston valves with their known defects.

Mr. Saxon had spoken of piston rods for horizontal engines with back slide, and having the piston rod cambered to counteract the weight of piston, and said it was not worth the trouble. He (Mr. Mannock) had come to exactly the opposite conclusion. With a 40in. cylinder, 6ft. stroke, the piston would weigh about a ton, and the rod being 18 or 19 feet between supports, it was clear the piston must drag on the bottom of the cylinder unless it was supported by the glands, which was quite inadmissable. He saw no difficulty about cambering the rod to the proper curve if the thing were set about in the right way. About 22 or 23 years since a firm on the continent made a special lathe for turning the rods with camber in them. The rod was fixed between supports at each end, and the centre was sprung out of line the proper amount, while two tools revolved round the rod and turned it up true while held fast at the three points.

He could not agree with the author of the paper as to the film of oil between the piston ring and sides of cylinder. The film was much too thin to transmit the pressure of steam to the outside of piston ring. If this theory was right, then by using a film of oil between two surface plates the pressure of the atmosphere would be transmitted to the surfaces of the plates, and they would not stick together as we know they do. The flapping noise made by the piston rings at the ends of the stroke was probably due to another cause, which might be explained as follows:—When two surface plates are rubbed together so as to exclude the air, you may slide one upon the other in one direction without impairing their adhesion, but as soon as you reverse the motion they come apart. Might not this be the case with piston rings seeing that the pressure behind the rings is only the average pressure, while the pressure on the piston at the moment of reversing is the maximum pressure?

Mr. Henry Webb referred to an old engine, built by Boulton & Watt, with piston packed with hemp, pressure on the boiler 20lbs., driving a corn mill at St. Helens, which the proprietor stated to be the best and most economical engine working in the town, far better than the new-fangled modern things. It would be interesting, if their Association could get a photo of it, to see what was considered in 1895 to be an "economical" engine. As regards piston valves they were very useful with steam hammers. When steam hammers were introduced the pressure was 40lbs. per square inch, and the slide valve was universally used, but now that pressures had risen to 100lbs. they could not possibly do with slides any longer, and had to have piston valves instead, in which there was nothing to look after but the ordinary wear and tear. He would be glad if Mr. Butterworth would, in the printed transactions, give them some information about the

utilization of rolled steel stamped plates for piston diameters, which was an important question as regards weight.

Mr. T. WALTON said the author had dealt with the construction of pistons and piston valves, and as Mr. Butterworth was a piston specialist, he should have been pleased to hear him give a little of his experience of wearing down in large horizontal cylinders. This they knew had been overcome with more or less success by various expedients, such as tail rods and back slides, cambering the piston rods, also by projecting the piston and junk cover at the bottom or the part in contact with cylinder, so as to increase the bearing surface. This plan was objectionable as the projection or shoe was subject to an unbalanced pressure (similar to a slide valve), viz.: cylinder pressure on the exposed portion of pistons circumference at top and nothing but perhaps a film of oil or moisture at the part in contact with cylinder.

There had been packing rings made to carry the piston block, either by allowing block to rest on the inner flange of ring, or by making the rings of ⊥ instead of L section.

He thought Mr. Butterworth could give them some valuable information respecting the practical success and value of the various expedients to minimise wear in this direction.

Mr. THOMAS ASHBURY, in moving a vote of thanks to the author for his admirable paper, remarked that it required a great amount of courage for anyone to take up a subject, with which all his auditors professed to be familiar. The author had done his task in a very creditable manner, and as already referred to, had not made it a personal matter. They were all indebted to him for introducing a subject which, although well-known, was not so well-known as it ought to be, and their views on the matter would no doubt be very considerably modified.

Mr. ALFRED SAXON seconded the proposal.

Mr. Gilbert Lewis in a communication wrote: Having had some little experience in the manufacture of pistons, especially with very large sizes, he had listened to Mr. Butterworth's paper with great interest. He could not altogether follow him in his theories, but they had heard enough to prove that one of the most important factors to a good engine was a good piston. They employed the best appliances for boring a truly cylindrical and parallel cylinder—therefore the piston fitting it should be of the best construction, so that working under all conditions, it should maintain that perfection. Had they got such a piston? He thought not. If they examined the wear of an ordinary Ramsbottom ring it would always be found unequal and principally on the shoulders. They might therefore conclude that if the ring wore unequally, so did the cylinder. Pistons of

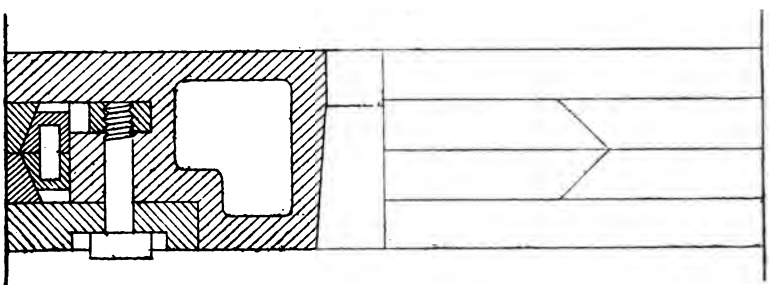

HARGREAVES' PISTON.

the Mather type with their inner coils or assemblage of rings minimised this unequal pressure of the single ring. But all pistons of this type with heavy cast-iron outer rings, expanded by either Goodfellow's or Mather's internal rings were by their excessive weight when applied to large horizontal cylinders, apt to sag down and allow the steam to pass on the top side. With large cylinders of 50 to 60 inches diameter, with pistons of the Goodfellow type, he had found it impossible to maintain a good vacuum owing to this leakage on the top side. In his opinion, such heavy piston rings should always be supported on

the top, the inner rings having a lateral expansion. The only piston he knew which had this solid support and lateral adjustment was the Hargreaves type. The accompanying illustration he thought sufficiently showed the arrangement. *(See opposite page.)*

The ordinary outer rings were supported by the inner rings, the latter being rigidly supported on the body of the piston. The inner rings were free to move laterally, and were adjusted by small coiled springs. This piston had given good results and in his opinion was one of the best types for large horizontal cylinders.

Mr. J. Donnelly in a communication wrote that he regretted he was unable to be present, as the subject to him was a very interesting one, from the fact that on the London and South Western Railway, a large number of Locomotives were fitted with piston valves (Beatie's system), which after some years trial were all replaced by ordinary slide valves.

It was found that locomotives with piston valves when running down an incline formed a vacuum, steam having to be kept on to destroy it; there was also the difficulty in getting water out of the cylinders.

These objectionable features had now been overcome by the North Eastern Railway, the arrangements for relieving the water pressure and destroying the vacuum being very practical and ingenious, reflecting the greatest credit on the designer.

Particulars of the working of these valves had lately been published in "Engineering," and the "Engineer," where it was set forth that owing to the reduction in friction there was a considerable saving in the wear and tear of the motion, besides more economical distribution of steam.

Mr. Butterworth thanked the members for the kind manner in which they had received his paper; their approval being

rather unexpected, as the paper was written more with the object of provoking a discussion, than to lay an abstract account of the present types of pistons and valves before them. Reviewing the remarks as a whole, with the exception of Mr. Mannock, no one seemed prepared to advance a theory as to the action of rings when at work in the cylinder as against that stated in the paper.

One or two speakers had mentioned that a ledge or other irregularity might be the cause of the noise sometimes met with, but this could easily be distinguished by the vibration set up in the engine. There seemed to be no doubt that the rings did leave the cylinder face for some reason or other, else why the drop at the end of the compression curve of many indicator diagrams?

It could not be put down to slide valve leakage, as that had the boiler pressure on its back, and it would seem absurd to suppose that it would suddenly spring a leak at any point under the boiler pressure. Again, one could scarcely see why condensation should show itself at this point more than any other. Therefore it must be due to the piston suddenly slipping steam near the end of the stroke, although up to that point it was practically tight.

Mr. George Saxon seemed to rate the workmanship of modern pistons too lightly. The ordinary test of fixing an engine on the dead centre and putting steam at upwards of 100lbs. pressure on one side of the piston while the cylinder cover was removed at the other, could be passed by 9 out of 10 new pistons without perceptible leakage. There must, therefore, be a very intimate contact between the piston rings and the cylinder, except at the point of reversal of the motion of the piston at each end of the stroke. Again, if such accurate surfaces as the Whitworth plates mentioned by Mr. Mannock separate

when their motion was reversed, why not piston rings from a similar cause?

Oil was not generally supposed to be an evanescent substance and an examination of a cylinder where good oil was used would convince anyone that, although put in drop by drop, a film of oil covered the whole surface. In conclusion, if the above action of the rings was not caused by the oil film it must be due to something thinner, as in the surface plates, and it would seem that the wrong view had been taken by those speakers who said that the oil was too thin or the cylinder, &c. not accurate enough. Perhaps at an early date some more skilful investigator would solve the problem.

It is doubtful whether the improvement in piston rings mentioned by Mr. Saxon will realize his expectations.

Some ten years ago the experiment of fitting two spiral springs side by side in the same pair of casings was tried, in order to reduce the weight, as a much lighter gauge of wire could be used for the springs. It was found, however, that owing to the small surface of contact between the two springs, they cut into each other and finally one of them broke. It seemed impossible to prevent this, as there must be some slight movement of the springs on each other owing to irregularities in the shape of the cylinder and the motion of the piston, and it might be laid down as a broad principle that the separate parts of the piston packings must have a good bearing on each other, and on the sides of the groove in the piston, or trouble was bound to ensue.

With respect to Mr. Taylor's remarks, it was no doubt a good thing to have a tight fitting piston, but to provide no compensation for wear would be to court disaster with modern speeds and pressures. Piston valves would have been an established success long ago if a solid block could be kept steam tight say only 12 months, but as a matter of fact the solid rings shown

Fig. 11 and 12 had to be adjusted nearly every month and even the McNaught valve he mentioned was provided with a compensating bridle and wedge.

With respect to piston and tail rods Mr. Alfred Saxon asked them to make the glands carry the weight of the piston—surely that was a mistake. In the first place, any form of fibrous packing was bound to produce more friction than two similar metallic surfaces; secondly, the surface was so small compared with that of the piston or slide blocks, and worked in hot steam or water while the latter is under the most favourable conditions of temperature and lubrication so that loss of power and damage to the rod would inevitably ensue, if the piston was carried by the glands.

If the trouble were taken to investigate a few examples either theoretically or practically, it would be found that in 90% of Engines having strokes upwards of 5ft. the deflection of the rod between the front and back slide blocks would be over $\frac{3}{8}$ in. Therefore, unless the rod was cambered or the slides were packed up, a tail rod was no manner of use and should never be used.

With respect to the defects found in practice with piston valves Mr. Hunter would find no trouble whatever if the valves were properly designed. Out of an experience extending over hundreds of valves for which the writer has supplied packings, he believes that not in one case had the liner or valve had to be replaced. In one case where the piston valves of a traction engine were examined after three years hard and continuous work, the packing rings were not open $\frac{1}{16}$ in. at the joints, and the wear on the liner was scarcely noticable, the diagrams being as good as from a slide valve engine.

The main point to be observed was to get the stroke of the valve as large as possible and the bars in the liner few and broad rather than numerous and narrow. By attending to these

details, the clearance in the ports could be reduced below that of a slide valve, and the skin friction of the steam when passing through the ports in the liner reduced to a minimum. The reason that engineers had fought shy of this type of valve was probably want of attention to the above points and the want of an efficient compensating packing.

With regard to forged or stamped steel pistons, there was no doubt that the weight may be reduced by one half by using this material. As mentioned in the paper they should be made in the form of a truncated cone, the over-all width of same being about ⅓rd the diameter. The boss of the piston should be formed on the inner side of the cone and the junk cover facing formed on the opposite side, so as to keep the width within the above limits. The dies for stamping the above type of piston could be finished entirely in the lathe and need only be of cast iron, so that the initial expense would be but small. Many of the Scotch locomotive people used pistons made in this manner, and if Mr. Webb or some other of the members who were forge proprietors could see their way to go into the business, it would be a great boon to most Lancashire engineers.

Mr. Walton was correct in condemning the shoe or projection sometimes provided to carry the weights of the pistons. In a piston over 9ft. diameter the shoe of which was 9in. wide by 4ft. long, it was found that the shoe required packing up every few weeks and the wear was certainly greater both on cylinder and piston than in a similar piston which had no shoe. Making the rings of T section so as to sheath the blocks was also open to the same objection as the shoe. A much better plan was to provide the Piston with a deep bull ring as was done by American engineers. The piston rings were fitted into the face of the bull ring, and the latter was provided with screws on its inner surface, so arranged that the piston block could be elevated to the centre of the cylinder when wear occurred.

Mr. Gilbert Lewis mentions the difficulty met with in large pistons working horizontally where the piston rings invariably leave the top of the cylinder. The difficulty had been overcome in several large pistons ranging from 50in. to 90in. diameter, in the following manner. The rings used were of the section shown in Fig. 3, having an ordinary circular spiral spring to force them against the cylinder and sides of groove in piston.

The spring was made in two lengths, each perfectly straight and so strong that when bent to a semi-circular shape they exerted a considerable force tending to get straight again. The joints between the ends of the springs when in the piston were fixed one at the top and the other at the bottom of same, and in this manner the effort of the springs to resume their straight form was made to keep the rings firmly to the top side of the cylinder.

It was pleasing to note from Mr. Donnelly's communication that the North Eastern Railway Co. had overcome the difficulties formerly attending the use of piston valves. It was a well-known fact that several of the large railway systems were devoting their attention to the same thing and the result could not fail to be an important decrease of friction, especially on light loads and high speeds. If one of those who had the advantage of conducting experiments on locomotive piston valves, could state their experience, it would be a most valuable contribution to current engineering literature.

---

9 Plates follow Illustrating this Paper.

UNIV. OF MICH.

UNIV. OF MI

PISTONS AND PISTON VALVES.

Fig. 1.

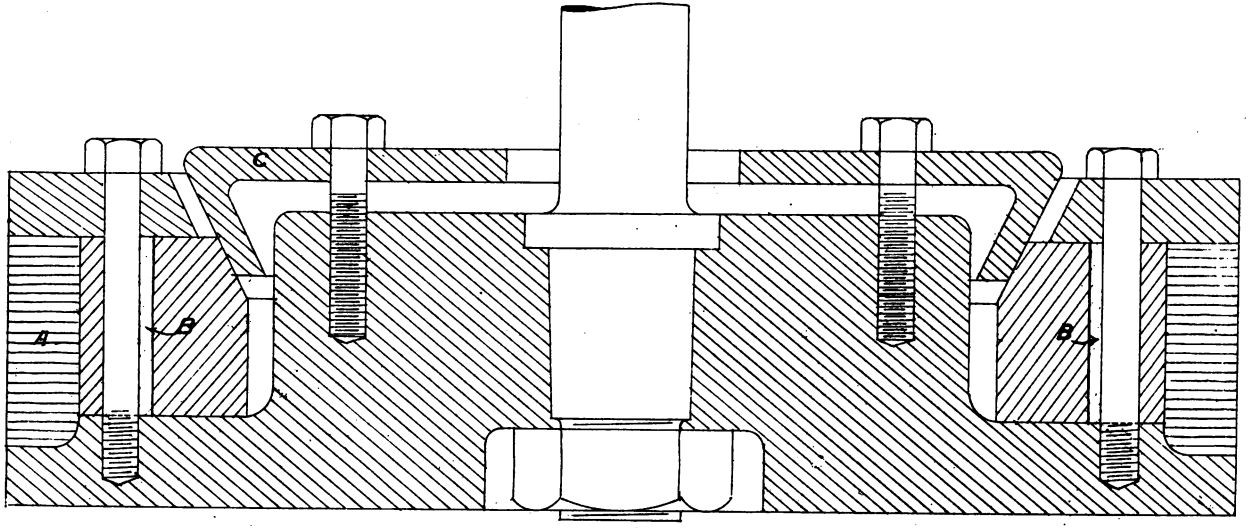

EARLY FORM OF PISTON. A.D. 1798.

A—The elastic packing.

B—Segmental block.

C—Conical junk ring forcing blocks B against packing A.

UNIV. OF MICH.

Pistons and Piston Valves.

Fig. 2.

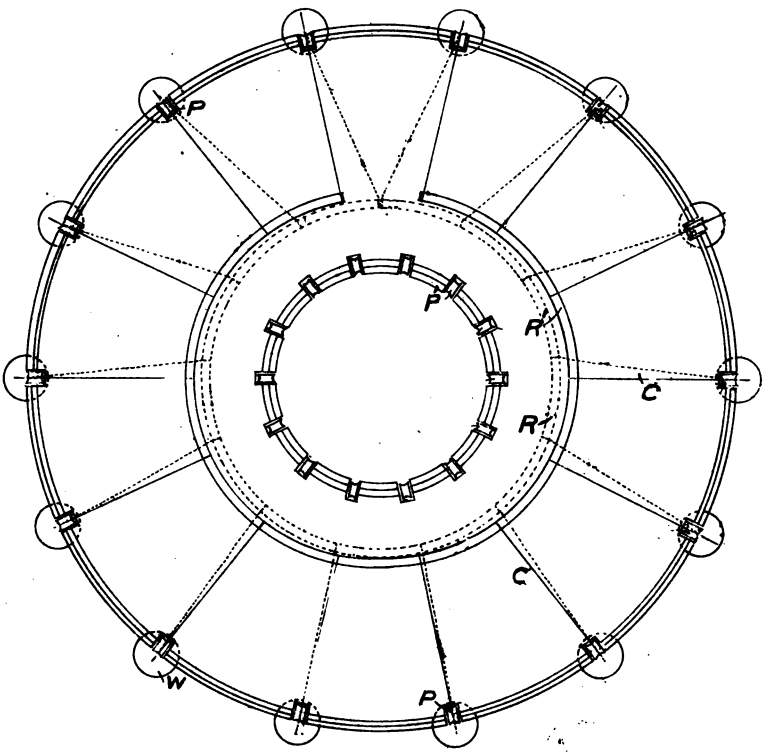

Mr. Ramsbottom's Apparatus for determining the proper form of Piston Rings.

R —The ring as coiled.
R'—The ring when sprung out.
C —The cords attached to the ring.
P —The pulleys over which the cords are led.
W—The weights suspended from cords C.
P'—The internal pulleys over which the cords are led to test the ring after it has been sprung out.

UNIV. OF MICH.

PISTONS AND PISTON VALVES.

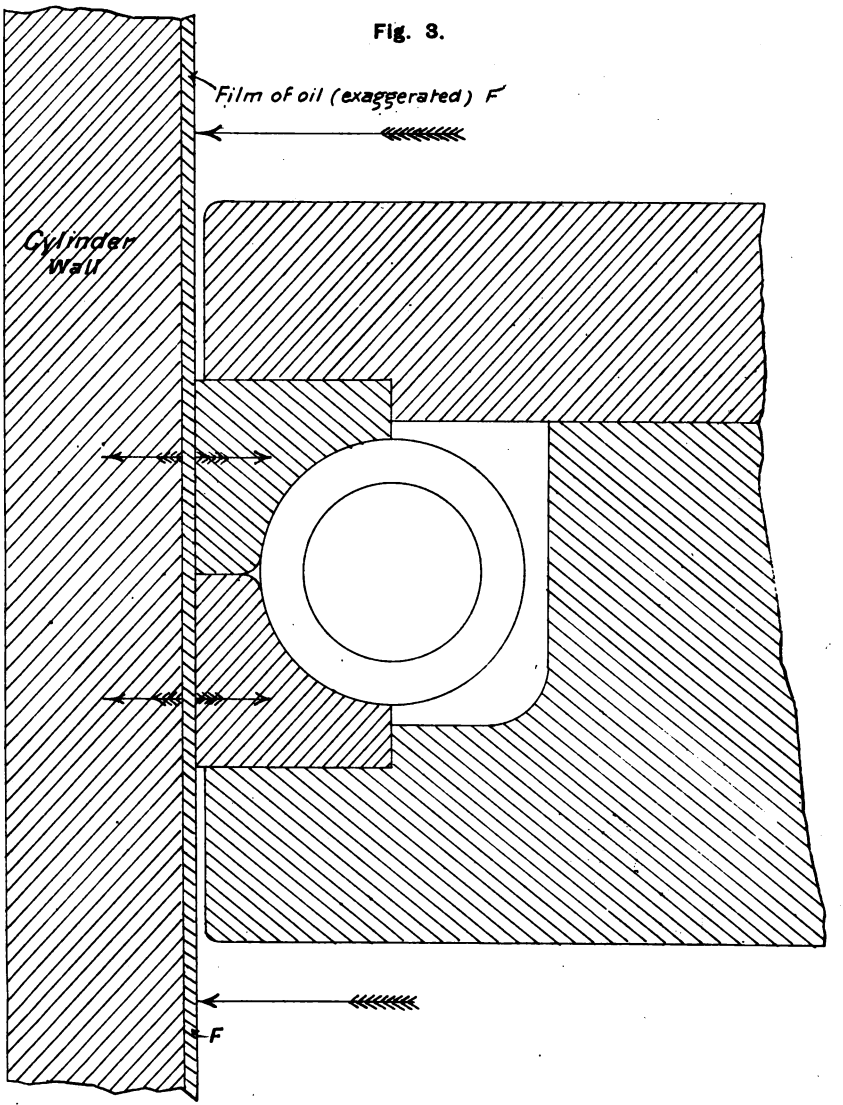

SKETCH ILLUSTRATING THE CONDITIONS UNDER WHICH PISTON RINGS WORK.

UNIV. OF MICH.

PISTONS AND PISTON VALVES.

Fig. 4.

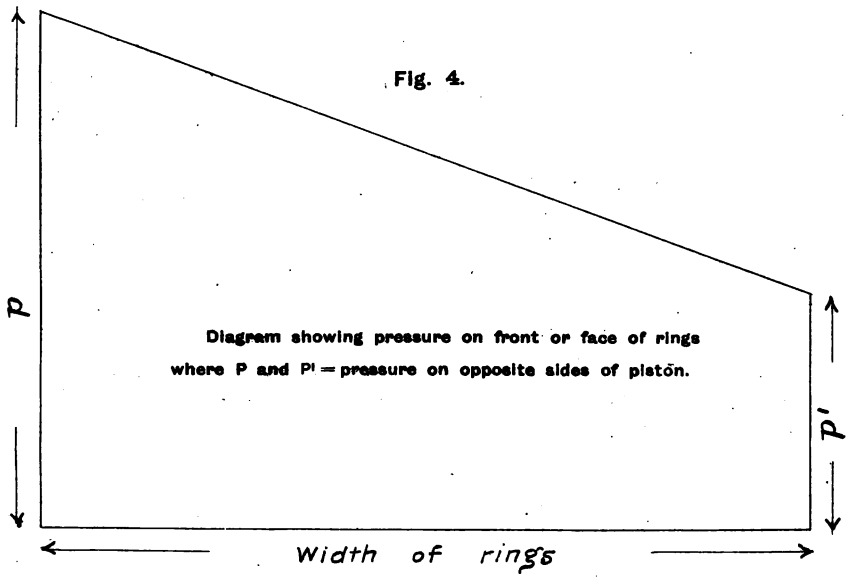

Diagram showing pressure on front or face of rings where P and P' = pressure on opposite sides of piston.

Fig. 5.

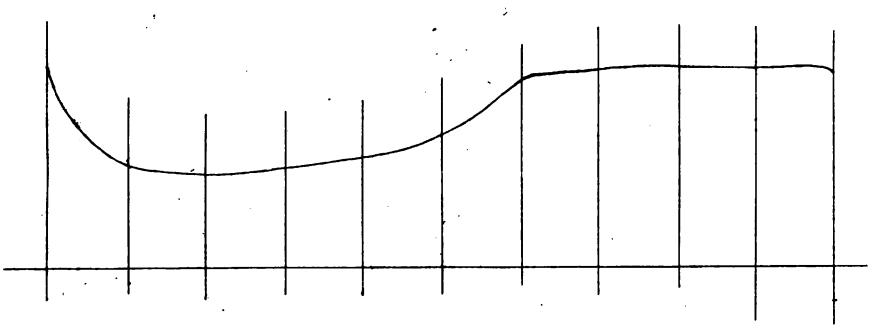

DIAGRAM SHOWING VARIATION OF PRESSURE IN FRONT OF RINGS FOR ONE STROKE OF H.P. PISTON.

UNIV. OF MICH.

Pistons and Piston Valves.

Fig. 6.

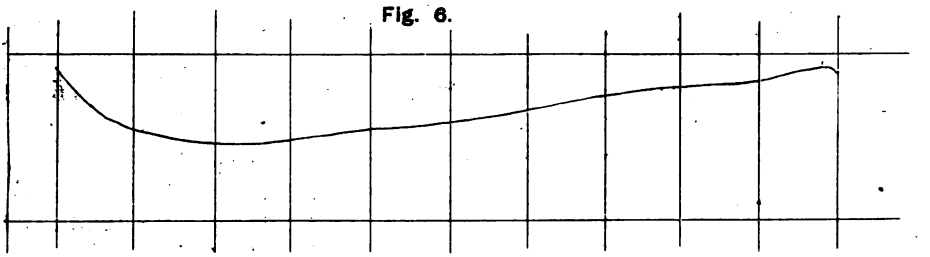

Diagram showing variation of Pressure in front of rings for one stroke of L.P. Piston.

Fig. 7.

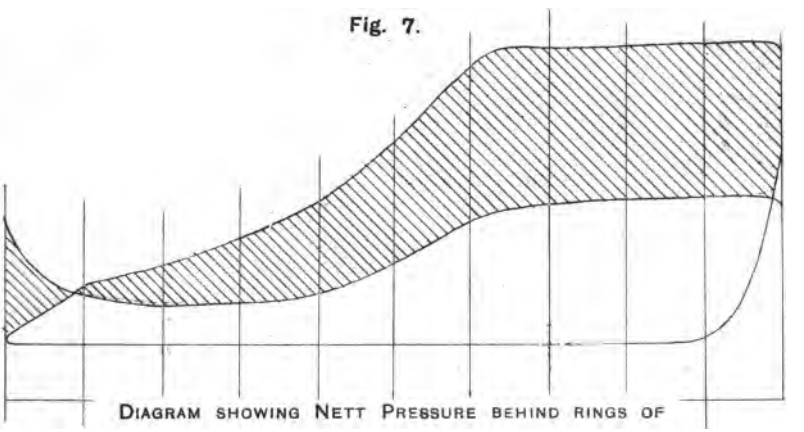

Diagram showing Nett Pressure behind rings of Steam Packed Piston.

Fig. 8.

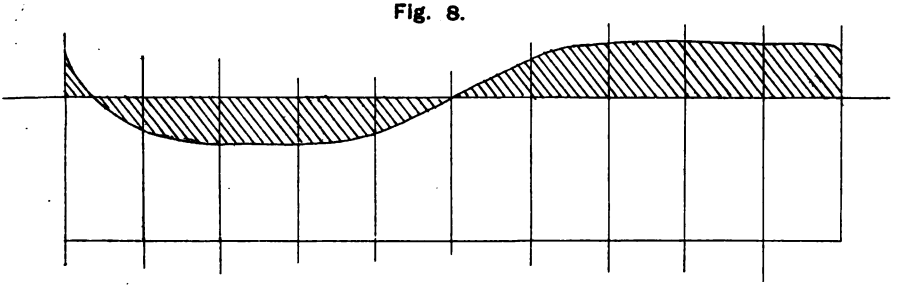

Diagram showing Net Pressure behind rings, from back of which steam is excluded as far as possible.

Manchester Association of Engineers.

U. OF MICH.

Pistons and Piston Valves.

Fig. 9.

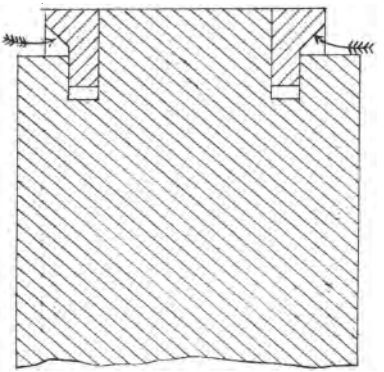

Fig. 10.

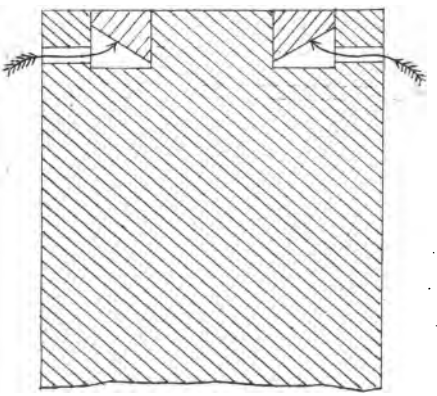

Two Types of Steam Packed Pistons.

UNIV. OF MICH.

Pistons and Piston Valves.

Figs. 11 & 12.

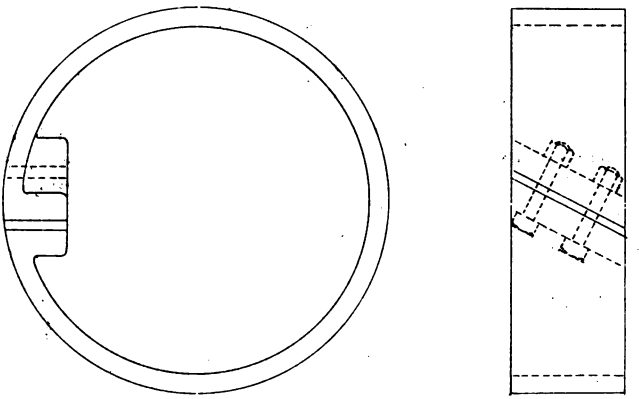

Figs. 13 & 14.

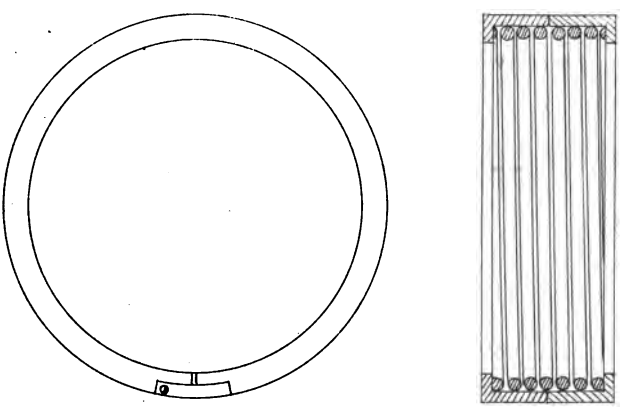

Rings and Spring Coil suitable for Piston Valve.

Manchester Association of Engineers.

UNIV. OF MICH.

PISTONS AND PISTON VALVES.

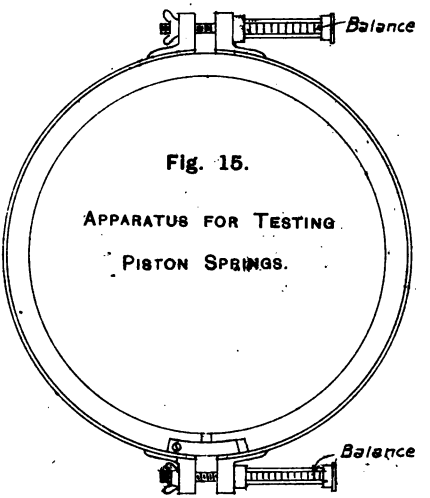

Fig. 15.

APPARATUS FOR TESTING PISTON SPRINGS.

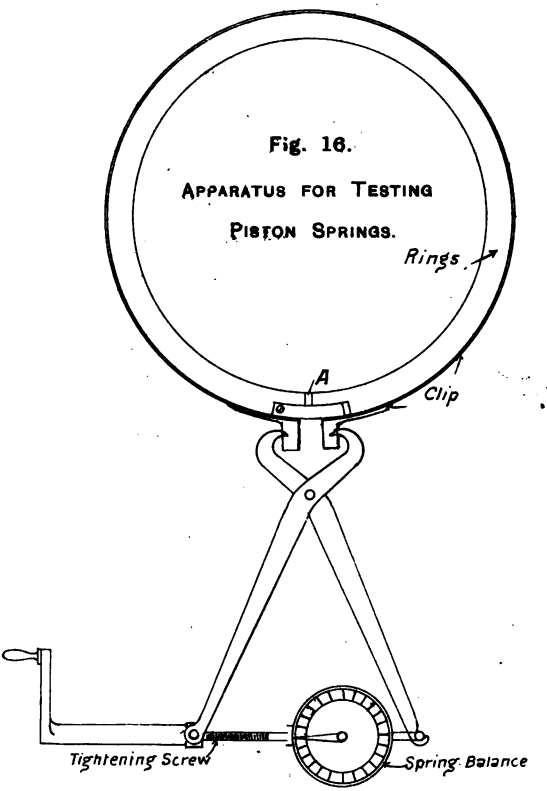

Fig. 16.

APPARATUS FOR TESTING PISTON SPRINGS.

MANCHESTER ASSOCIATION OF ENGINEERS.

UNIV. OF MICH.

PISTONS AND PISTON VALVES.

Figs. 17 & 18.

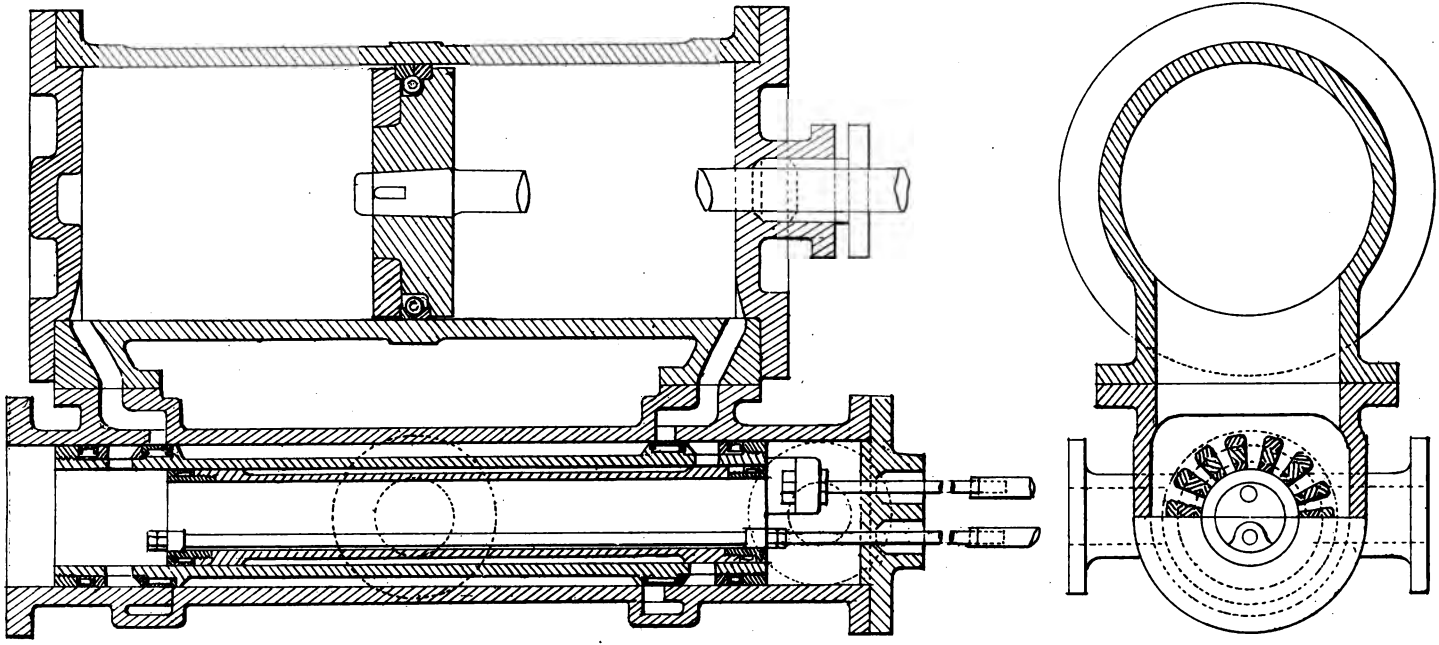

1/12 SIZE.

CYLINDER FITTED WITH MAIN AND CUT-OFF PISTON VALVES.

MANCHESTER ASSOCIATION OF ENGINEERS.

UNIV. OF MICH.

ELECTRIC LOCOMOTIVES.

READ SATURDAY, NOVEMBER 23RD, 1895,

BY

Mr. EDGAR WORTHINGTON, M.I.Mech.E.,

MANCHESTER.

The present century coincides very nearly with the period of development of the steam locomotive from its discovery by Richard Trevithick to the present highly elaborated machines, one of which moves a load of 2,000 tons weight, while another speeds at 68 miles per hour, drawing 112 tons behind it over 400 miles of country, frequently exerting 1,000 horse power. During this same period countless experiments have been made with varied success to employ other material than steam and coal to haul goods and passengers upon a railway.

The extravagant waste of heat in all steam locomotives, due to the high latent heat of steam, has led many experimenters to seek for some other more suitable expansive medium. France has done much in adapting the compressed and hot air engines for street locomotion, while gas and oil engines have been similarly applied in Germany and elsewhere. Naphtha engines have recently found favour on the common roads in France, and have won the race from Paris to Bordeaux and back.

The use of hot water charged at high pressure into a tank has found suitable application to steam motors in the streets of Batavia, where the public roads are fortunately almost level, and where the heat is so tropical that the abolition of a fire and fuel upon the steam locomotive is a great advantage to both the engine driver and the public.

A solution of Glauber salts, which have the property of absorbing large quantities of heat and restoring it during

crystallization, has been used by Honigmann with partial success in Germany and in Chicago, as a substitute for ordinary fuel in the generation of steam on small locomotives, both on tramways and railroads.

A concentrated solution of ammonia has been successfully substituted for water in tramway engines at New Orleans, but the difficulty of confining the ammonia gas and manipulating it as it passed through the engine has prevented its use in this country beyond an experimental stage.

It has been left for electricity to make any serious encroachments on the domain of the steam locomotive, and the last 20 years have seen such a rapid improvement in the construction of electric dynamos and motors, that it would be rash to prophesy how far electricity will further supplant steam in the locomotives of the next 20 years. When your Council did me the honour to ask me to write a paper upon "electric locomotives," I felt that there were members of your society more capable than myself of performing this pleasant task. But having had something to do with the construction of the locomotives on the South of London Railway, and having more recently made special studies of Electric Railways in this country, the United States, Canada, Germany, France, and Tasmania, it is with much pleasure that I have put together the following observations and notes.

It would take too long to trace here the development of the electric locomotive, but the commercially successful electric railway does not date further back than about 1886, when there were but 12 or 13 electric lines in the world. 1889 saw its introduction to Boston, U.S.A., a city which in 1893 could drive 640 electric cars from one central station.

Much credit is due to experimenters such as Finney, Van Depole, and Daft * about 1882, and earlier to Bessolo, in 1855,

* See Recent Progress in Electric Railways, by Carl Hering, New York, 1892.

in Italy. The most intrepid experimenters in electric railways have been amongst the Americans, and they had the good sense to borrow experience from the more highly developed electrical machines of Europe. The San Francisco experimenter Field * in 1877 bought a dynamo electric machine in Europe for this purpose, but the ill-fated machine was wrecked in a sailing vessel and lies at the bottom of the sea.

As far as I can gather the oldest electric locomotive was constructed by a village blacksmith,† who in 1835, exhibited his model running upon a circular railway in Boston, U.S.A. He constructed several other motors in 1837 and 1838. These were admirably designed, and in essentials, even to the shunt winding, differed but little from some of the most modern and successful types in use at the present day. One of them was brought by Davenport to England, where Faraday saw it and was pleased with it. It is narrated, however, that Faraday took a broom that was in the room, and put it against the flywheel, stopping the motor, after which he refused to invest or recommend it to others.

During my first visit to America 1881-83, there was on that continent, only one electric railway or tramway of any moment. This installation was laid down at Richmond‡ on the Sprague system. It was built without regard to cost and was extensively advertised as a grand success both practically and commercially. It was, however, doomed to failure, and after serving as a model for many other less expensive lines, was bought up by other parties.

The enormous development of electric tramways since then in America, Germany, England, France and other countries has been principally in one direction, viz., by using an overhead

* See Recent Progress in Electric Railways, Hering, 1892.
† Ibid.
‡ See Recent Progress in Electric Railways, H. Haupt, 1893.

conductor with a trolley running upon it, connected to the car by a conducting pole.

When I last visited America in 1893, almost every town was provided with this type of electric railway running through the streets. In the two sister cities of St. Paul and Minneapolis, with their 350,000 population, not a horse car is to be seen. The former has 90 miles and the latter 120 miles of electric railway, but grades over 17% are worked by a cable. All the feed wires for the overhead conductor are buried in a conduit between the rails, and the daily speeds of 20-30 miles per hour have attracted a large amount of suburban traffic from the rail roads. At that date 1893, there were 13,000 miles of electric railway in the United States, about 2,000 miles of which was either built or converted during the year 1892.

The electric railways constructed by European engineers now number 81, with a total length of about 440 miles. Those in Europe are distributed as follows:—

Germany.....	22	Electric Railways.
England	18	,, ,,
France	11	,, ,,
Switzerland	8	,, ,,
Italy	4	,, ,,
Austria	4	,, ,,
Belgium	3	,, ,,
Spain	1	,, ,,
Norway	1	,, ,,
Roumania	1	,, ,,
Russia.....	1	,, ,,
Servia.....	1	,, ,,

Of these the largest are in England, viz., the City and South London Railway, which uses continually about 1,200 kilo-watts, and the Liverpool Overhead 900 kilo-watts. The daily mileage of electric street cars in the United States sometimes reaches 150-200 miles per car. That of the Leeds Electric Tramway is

110 miles, while the cars of the Halle Tramway, one of the best known and best equipped in Germany, run only 71 miles daily.

An electric motor service is less costly than a cable and more efficient than a horse car service. It is therefore coming into very general use where the volume of traffic is neither very small nor extremely large. Financial experience shows that it is not likely to supplant either the cable for crowded traffic or the steam motor for infrequent traffic. "A tramway manager" writes,* "that the simple railway type of locomotive is the most successful type of motor used on tramways to-day for services of 10 or more minutes frequency."

For many years the cable system had the great advantage of unlimited power at starting, but the poverty of the early electric locomotives has been overcome, and the rapid acceleration of these engines when starting is now frequently sufficient to throw passengers off their feet.

Another example of the advantages of concentration with electric power is found in the locos and cranes on Messrs. R. Dunsmuir's coal wharf† at San Francisco, where electric cranes first lift the coal from vessels through a height of 60-80 ft., and then locomotives exerting a drawbar pull of 800 lbs., haul it away on a level railway. The load upon the dynamo in this installation rises from 0 to 75% of full load in from 5 to 10 seconds, and drops from full load to 0 in about an equal period of time.

Again, the goods traffic upon the Rockland and Camden Street Railway is carried in double bogie vans 25 ft. long by 7 ft. wide, weighing 13 tons. The load carried is 10 tons, and a 25 HP single reduction motor drives each of the four axles. These four motors absorb a large amount of current while ascending several long grades of 1 in 13.

* See Railway World, May, 1895.
† See Iron Age, May 23rd, 1895.

The advantages claimed for the employment of electricity in town and suburban traffic may be summarised as follows :—

1. Comfort of the passengers.
2. Greater speed.
3. Cleanliness.
4. Ease of lighting the carriages.
5. Ease of heating the carriages.
6. Ease of ventilating the carriages.
7. Possibility of braking by electricity.

This last has not yet been fully developed in practice, but Mr. Sprague calculates it is possible by this means to return back to the electric line 40% of the total energy used. Air and hand brakes are used at present, the air being either stored in reservoirs or pumped by a small motor.

PRINCIPLES.

Without attempting to explain the principles upon which ordinary dynamos and motors are constructed, I propose to briefly consider, chiefly from a mechanical standpoint, how some of the requirements of a locomotive are attained by the application of electricity.

The large torque, turning effort or starting power of a railway motor distinguishes it from most other motors. Losses from hysteresis, eddy currents and friction are minimised, and the torque increased, by using a large number of windings of wire in the armature. Good running and an absence of sparking at the carbon brushes and of heating are also thus obtained. Mr. H. F. Parshall, one of the leading electric designers in America, points out that very heavy magnetic induction is aimed at in the motors, there being—*

100,000	c.g.s.	lines of force	per square inch	in yoke.
60,000	,,	,,	,,	air space.
80,000	,,	,,	,,	armature core.

* See Engineering, April 19th, 1895.

The motors should work economically when lightly loaded, for a lengthy experience has shown that the average work of electric street locomotives is only 20% of their maximum work at starting. Prof. Kennedy places the average efficiency of the gearing on American tram locomotives as 75%.* The difference of efficiency of engines with and without gear he places at about 17%. Other authorities state that in the modern single reduction motors in good order 80% is obtained with widely varying loads, and the Westinghouse Co. profess to obtain an efficiency of 92-96% under full load.

In the older double geared motors an efficiency of 60% between the armature and the axle was rarely obtained.

In America where the commercial development of electric locomotives has found its widest growth, many types of motor were seen working upon the same railway or tramway two years ago. But in 1893 the Westinghouse and the General Electric absorbed all the smaller companies, and showed at the Chicago Exhibition a most interesting and varied collection of electric railway material.

The mechanical details of these standard motors have been simplified and improved until their cost is considerably below that of a few years ago. The *armature* is built up of a core consisting of soft iron discs. No paper insulation is used between these discs, but the Foucault currents are prevented by simply coating each disc with black oxide by heating. The discs are punched out, having notches in their circumference. They are threaded upon the axle and compressed by hydraulic power, after which the notches are filed out by machinery. The coils are fitted into these notches and coupled up with the bars on the commutator by hand. The coils are then secured by bands of wire and the armature thus completed revolves within $\frac{1}{10}$ of

* See Inst. Mechanical Engineers President's Address, 1894, p. 188.

an inch of the poles of the magnet. Much of the lighter work at both Lynn and Pittsburgh is done by women.

The magnets are sometimes made with two, and in large locomotives with six or more poles; but the great mass of successful motors up to 100 horse power are made with 4 poles. These are cross connected and thus require only two sets of brushes instead of four. Motors are generally series wound. The pole pieces are steel castings and made carefully with risers as large as the castings to secure solidity. The metal is soft, containing ·18 carbon, with only small allowances of Si. Mn. and P. One steel foundry with two 15 ton melting furnaces in Massachusetts is entirely devoted to making steel castings for electric locomotives.

The two sets of brushes are made of carbon and stand vertically upon the commutator. They are looked at and adjusted once a day, and being self-lubricating, will run for a great length of time.

The spur wheel teeth are milled out of the solid by automatic gear-cutters, taking two grooves at each cut, and the whole motor is enclosed in a hinged cast steel box, which when closed is watertight, except where the axle passes through.

I have seen cars run through a flooded street in Chicago, the water being nearly up to the axles without any apparent damage, showing that water is effectually excluded from the vital parts of the motor.

The *requirements* of electric motors for railway purposes may be summarised as follows:—

1. Lightness.
2. Must be completely closed from dirt, water, &c.
3. The capacity should be ample to enable it to perform its nominal duty for two hours continuously without heating above 50° C. (122° F.)

4. The motor should be capable of developing on emergency 50% more than its rated capacity.

5. All parts should be accessible and easily taken apart.

Of all these the first, that of lightness, is the most important, because a large portion of the weight of the motor, in all but the largest sizes of direct driven and single reduction designs, is carried direct upon the axle without the intervention of springs. The most modern type of motor made by the General Electric Company for street railways, and having a capacity of 20 horse-power, weighs only 800 lbs., including its single reduction gear. An example of a more powerful direct driven axle is found in the Liverpool overhead railway motors, in which about 52 cwt. dead weight is rigidly attached to each axle, though part of this weight is supported by the helical springs, which absorb the turning effort. In the larger locomotives, such as that recently introduced at Baltimore, the motor weighs over 11 tons and is entirely supported by springs. In the Heilmann locomotive the motor weighs 2·7 tons and is carried upon the frames. But in all cases where the armature is wound direct upon the axle or upon a shaft connected by spur gearing with the axle, the mass of both armature and magnets must be firmly connected to that axle to maintain the uniform clearance between armature and poles. Some alleviation may be found in supporting a portion of the weight of the magnets on springs, yet any sudden rise or fall of the axle-boxes must effect a similar rise or fall of all parts of the motor rigidly connected to the axle. It will therefore be seen how important is this quality of lightness of construction.

STARTING POWER.

It is well-known that the severest effort a horse or a locomotive is called upon to exert is at the moment of starting the load, when the co-efficient of friction is high and other resistances are apt to be abnormally great. The electric motor, having no dead

centres, compares advantageously with the steam engine in possessing a uniform starting effort or torque at all positions of the revolution. A large amount of ingenuity has been bestowed on producing the greatest possible torque, and the eagerness of manufacturers to claim a large share of credit in this respect was shown at some of the trials of the street car motors in the Chicago Exhibition of 1893, when the competitors were allowed to sand the rails and even to put wood wedges under the wheels while the dynamometer was registering the tractive effort. A very considerable momentary effort may be thus obtained by a skilful manipulation of the electric current. But the motors can exert nothing like this in continuous duty, and for practical purposes these tests were ridiculous. The 95 ton Baltimore locomotive has been constructed to exert a draw-bar pull of 21 tons at speeds up to 15 miles per hour, and half that pull at speeds up to 30 miles per hour. This means a horse-power of about 1,800, but it remains to be shown that this can be carried out in daily practice.*

The regulation of the currents to produce different hauling power at various speeds is effected by an ingenious compound switch, consisting of a barrel with metallic strips fixed as arcs upon its surface, in conjunction with a "diverter" or collection of resistance coils. The necessary connections are effected as the barrel is revolved by means of a handle corresponding to both regulator and notching up lever of a steam locomotive. The manipulation of large currents would be accompanied with destructive flashes were this barrel not embraced by a large magnet which "blows out" the sparks immediately they tend to form. At the Chicago Exhibition switches of this kind could be seen in every detail and were at work upon the Intra-mural Railway, &c.

* The Tunnel traffic is now being worked slowly by these engines, Sept., 1895.

An example may be given of such a regulating switch attached to a Westinghouse electric locomotive, having two 30 HP motors each driving one axle. The regulating handle moves in a circle and has seven principal positions—

1. Starting, when the 500 volt current passes through both the motors, including armatures, fields, and resistances all in series.
2. As in 1st, but with half the resistance cut out.
3. As in 1st, but with all the resistance cut out.
4. The magnetic field is reduced.
5. One motor is entirely cut out, the other motor acts alone.
6. Both motors run in parallel circuit without resistance.
7. As in 6th, with the magnetic field reduced.

The resistances in this case consist of spiral rolls of tape iron, each layer being separated from the next by mica. These resistances frequently get red hot in service. A separate switch is used for reversing.

One of the most striking features in electric locomotives is the uselessness of making an engine-fit of the parts. This is due to the absence of any reciprocating motion such as occurs in steam engines. There is no tendency to knock in axle-boxes or in bearings, and these parts can therefore be made very simply. Even the fulcrum pins which carry the motor are seldom turned, but are merely lugs cast upon the enveloping steel casings.

The largest electric motor upon which I have travelled weighed 27 tons. It was built for experimental purposes to ascertain certain facts, and to furnish experience for designing the Baltimore 95 ton locomotive, which I saw under construction in the works at Lynn (Mass.)

This 27 ton locomotive consisted of a pair of frames of strong bar iron, with cast iron fittings carrried upon two axles, with

wheels about 4ft. 4in. in diameter. Each armature was concentric with the axle, but, without being rigidly attached to it, drove the wheel direct through a flexible coupling. These armatures were about 3ft. 7in. diameter and very heavy. The current was brought from an overhead conductor by means of the ordinary trolley pole to the switch regulator, which for safety was operated by an air cylinder and oil cataract. The air was maintained at a constant pressure of 65 lbs. per square inch by means of an oscillating pump driven by a small motor geared into the pump shaft, and automatically regulated by an ingenious resistance switch operated by the air pressure. This air was used for working the brakes, blowing the whistle and operating the regulator switch. The engine was tested in a "tug of war" against an ordinary steam locomotive, having 30 tons upon its coupled wheels. For this trial additional resistances were introduced, and a current of 600 amperes is said to have flowed through each motor. The electric engine pulled the steam locomotive for 9 feet, but its wheels slipped and it was then easily overpowered by the superior adhesion of the steam locomotive.

Time will not permit the examination of the elaborate and economical methods adopted for the production of the electric current for railway purposes. In all cases except that of the Heilmann locomotive, which carries its own generating plant (see p. 220), this current is produced in buildings specially arranged either for water power, or for delicately governed high pressure steam engines, driving either direct or through belting the generators. These maintain a constant electrical tension of say 550 volts at their terminals, while the current delivered may vary from 0 amperes to full power.

But something must be said about the kind of current or the 'fuel' supplied to electric locomotives, and the methods adopted for picking up this current.

Elaborate experiments have been made in France and elsewhere with the continuous, the alternating and the three-phase currents resulting in the adoption of the first named for all ordinary conditions of service. The three-phase alternating current appeared at first to have much to recommend it, owing to the absence of any brushes or ring collectors upon the motor. But the weakness of its starting effort and the necessity for synchronizing the dynamo and motor were sufficient to condemn its use for the conditions of frequent stopping and starting on a railway. After deciding that the three-phase current was suitable only for level railways with few curves and stops, these French experiments were abandoned.

The three-phase current is about to be used at Lowell, Mass., as an economical method of feeding the line at considerable distances from the generating station. A low voltage alternating current will be first produced and converted to a high tension 5,000 volt current, which will be carried upon comparatively small feeding wires to two sub-stations, 9 and 14 miles distant respectively, where it will be received in transformers and by means of rotary converters will be delivered to the main line at 500 volts.*

500 or 550 volts is the usual tension adopted on the majority of tramways and small railways with conductors above the ground at present at work. It is not dangerous to persons, but on the continent this is considered the limit of safety. This current is easily dealt with on small locomotives requiring only 50-80 amperes.† But with large locomotives, requiring say 600 HP, the current to be manipulated rises to 1,100 amperes, and such powerful currents must be gradually diminished before being completely broken. Rheostats, similar to those already described in use upon tramways, would be too bulky and heavy,

* See "The Engineer," August 9th, 1895.

† NOTE.—On the Liverpool Overhead Railway the familiar flash of light when the current is switched off shows the nature of the difficulty of dealing with larger currents.

so the higher tension of 800 volts has been resorted to in a heavy electric goods and shunting locomotive, with four axles coupled, which has been built by the Westinghouse Company and the Baldwin Locomotive Works, and was tested this year in Philadelphia. The engine is the invention of Messrs. Sprague, Duncan and Hutchinson. It weighs 60 tons, and each axle is driven by a 250 HP motor. A speed of 35 miles per hour is to be attained with 225 revolutions of the wheels per minute, and the draw-bar pull is said to be independent of the speed and to reach 10,000 lbs.*

One of the most serious difficulties in introducing electric railways into a populous country is the damage to telephone and telegraph circuits, which is caused by leakage from the return wire. In many cases the rails alone constitute this return circuit, but the usual way now is to lay an armoured copper wire between the rails, connecting it with them at intervals. The stringent rules of the Board of Trade compel the use of voltmeters, and if the difference of voltage at the extreme ends of this wire exceeds 7 volts the railway must be closed. It seems not unlikely that the 3-wire system may be introduced to facilitate compliance with this regulation. In the case of a double line, or where two lines are near together, this system appears to be applicable, the rail circuit forming the third wire, with its comparatively small current. This 3-wire system has been tried on a single line by splitting the conductor up into insulated sections and connecting the alternate sections together to form one wire, while the rail formed the third wire. The object aimed at was a diminution of ground leakage, but the system did not work well.

The conductor upon which the trolley runs will carry current unaided for 1,000ft., but it is usual to have a feeder connected at

* Illustrated in Railroad Gazette, April 19th, 1895.

I have been recently informed that this engine has been used for shunting, but has not yet been put into regular service.

shorter intervals, especially in crowded places where the breakdown of a conductor delays the whole section.

The *Method of Picking-up the Electric Current* divides itself into two branches, viz., (1) from a conductor above the ground, and (2) from a conductor in a conduit.

The earliest electric tramways on the continent had two steel or copper split tube conductors, suspended from steel wire ropes. These two tubes carried the supply and return current respectively, and a metal slipper ran within each tube, connected by a flexible cable with the car. This was used at Frankfort, Vevey, and other places. Messrs. Siemens still use a double overhead conductor, with a difference of potential between the conductors of 200 volts, but a double trolley is employed. The old continental method of picking up by a slipper is being revived in the large 95 ton locomotive for the Baltimore and Ohio railroad, where a brass shoe 2ft. long, 7in. wide, weighing 25lbs. is used, sliding between two Z irons, placed one inch apart.*

Messrs. Mather and Platt in the Isle of Man, Sweden, &c., and Messrs. Siemens in Karlsruhe and other places, adopt a horizontal bar pressed upwards against the overhead conductor for picking up the current, but the general method for street traffic in America and elsewhere is the use of a rolling contact giving rise to the term "trolley" system.

The 3rd rail near the ground seems the most suitable system for railways where the line is fenced in and a tractive effort of 100 HP or more is required. This 3rd rail or conductor is placed between the rails in the City of London and the Liverpool Overhead Railways. It was placed outside of the gauge space on the Intramural Railway at Chicago, a similar rail on the off side being used for the automatic signals. It was noticeable

* See Paper by Dr. Duncan before Railroad Telegraph Superintendents, June, 1895. See also page 219.

in the latter railway that the mechanism provided to press the cast-iron shoe upon this steel 3rd rail was not required. The weight of the simple shoe dragged along by inclined links provided ample pressure upon the rail.

In France also the 3rd rail has its advocates, and two locomotives of 400 HP are now being constructed to this system.

The *conduit* system found one of its first successful applications in 1885 at Blackpool. The system is open to the objections that dirt, snow and water get down into the conduit through the slot and afford facilities for leakage from the conductor. Hitherto the Board of Trade has discouraged the introduction of this as of other imperfect systems which may have become popular in other countries. It is found difficult to prevent leakage in these open conduits, and 300 volts is the highest tension recommended. The early morning leakage at Blackpool amounts to 80 amperes.*

Several other conduit systems have been tried in Europe and America, among others those of Bentley-Knight, Love, Connett, Wheless, and the Buda Pesth.

The most promising is that recently installed in Lenox Avenue, New York, in which the conduit contains two conductors placed six inches apart. The difference of pressure in these two circuits is 350 volts, and a plough attached to the locomotive presses between them gathering current from one and returning it to the other. In this way no current passes through the rails or the wheels and axles. This system being cheaper than the cable, and free from many of the objections to the "trolley," seems likely to extend.

The closed conduit has been employed experimentally with some success; having no slot the conductor is entirely protected from dirt and weather. It has been put down at Lyons in 1894, at Washington, and other places. In Gordon's

*Made in January, 1888. See page 211.

system the metallic ground surface strip with which the contact was made, was divided into insulated sections 100 yards long. At equal intervals magnets were placed which pulled with 7lbs. effort, lifting the conductor into contact with its section of the metallic surface strip on the approach of a train.

In Pollack's system the locomotive carried the magnet, lifting the conductor into contact as it passed along. In Germany, Schuckert found that contact could be more surely and easily made in the closed conduit by heaps of iron filings, which made innumerable contacts without lifting any great weight of metal. It has been imagined that in running after a tram of this description some would-be passenger might tread upon the magnet box and remain anchored there by the nails of his boots until the train had safely reached the other end of the section. Mr. Edison is said to be developing and building a ¼-mile experimental line, to which he will supply a current of 1,000 volts to be transformed at intervals to 20 volt currents in sections of the rail itself. This could not harm a horse or man, and if it proves practical should be a blessing to many a disfigured city of the United States and Canada by enabling them to remove the unsightly posts and overhead wires which also impede the free use of fire escape apparatus. But enough has been said about the conductors, and the principles involved in the construction and design of electric locomotives. Let us now consider briefly some examples.

Examples.

We may take these under four heads—

1. Locomotives carrying accumulators or storage batteries.
2. Geared locomotives supplied with current from a fixed conductor, either overhead, near the ground, or underground.
3. Direct driven locomotives supplied with current from a fixed conductor.

4 The Heilmann locomotive producing its own electricity as it travels.

Locomotives driven by storage batteries have not been largely introduced chiefly on account of the difficulty of carrying sufficient power to start smartly and to ascend inclines. There are numerous cases where these have taken the place of trams driven by horses. For instance, in 1893 on Second Avenue, New York, 7 ton tramcars on the Waddell-Entz system were taking their places among the 5 to 6 miles an hour horse-cars in the crowded thoroughfares, and running 12-mile trips between charges, including the ascent of a 1 in 40 grade for a length of half a mile. In Paris, three tramways of varying lengths up to 5 miles are entirely worked by accumulators. The motor and passenger car are combined in one vehicle and weigh when loaded 11¾ and 14 tons. The latter have been at work three years, and each carries 8 tons of accumulators, consisting of 108 cells, each containing eleven plates 8in. × 8in. These vehicles run 23 miles without recharging. The Batteries are charged to 260 volts and have sometimes retained the charge six hours. These batteries give up 70% of the energy absorbed and the arrangement for unloading and loading them are such that this operation can be accomplished in five minutes.

Some of the leading French Railways have been experimenting on this type of locomotive upon a larger scale. The Northern of France Railway built an engine in 1893, calculated to run at 125 miles per hour. It was driven by four motors, each with a maximum power of 100 horses.

The Paris, Lyons, and Mediterranean Railway took up the following design of Messrs. Bonneau and Desrozier, but it was not built—

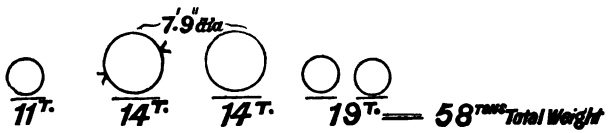

The weight of acumulators to be carried was 8·94 tons and the engine was to develop 1,183 HP at a speed of 74 miles per hour. The weight of the armature and its carrying tube was to be supported by springs upon the frame of the locomotive, and thence upon outside axle boxes. Further particulars may be found in the reports of the International Railway Congress, 1895.

The same Railway Company undertook in 1893 the construction of a somewhat smaller experimental accumulator-driven machine of 246 HP, in which the two axles were each driven. The field magnets were excited by accumulators carried upon the machine itself; but the chief source of energy was a battery of accumulators carried in a separate vehicle and weighing 44 tons.* This Railway Company has now abandoned its experiments with electric locomotives, but persons interested in electric traction upon our main lines of Railway, will await with interest the results of further trials which are to be made with other engines in France.

The second heading in our classification is Geared Locos., fed by an outside current. One of the most noteworthy of these is the Blackpool promenade tramway, with its underground conductor, which has been in successful and almost constant use for about 10 years. It is unnecessary to describe here the details of this tramway, but as an example of actual working I would record the following notes taken in the Power House in January, 1888, with 3 cars working:

The voltage was 240. Each of the 3 cars on the road took about 20 amperes of current or 6½ HP; this was produced by one Elwell-Parker dynamo. When starting in the early morning there is a considerable leak in the line amounting sometimes to 80 amperes, or equal to the power to drive 4 cars; but this leakage diminishes rapidly, until in about half an hour it has become normal. By means of keeping the commutator smooth

* See Reports of International Railway Congress, 1895.

and applying but little pressure to the brushes, the dynamo was running very evenly in spite of the severe variations of current.

An example may be seen in the suburbs of Lynn, Mass., of the method of gearing by pitch chains and sprocket wheels. It has been applied to several small street locomotives, and has some good features. The whole weight of the motor is thus taken off the axle, and the elasticity of the connection between armature and axle is excellent. I found tram locomotives of this type running at considerable speed over a second rate rail, and the motors being completely carried upon the car frame were not affected by the irregular motion of their driven axles. Dust gets into the chain, however, and this form of gearing is not yet popular.

Coupling rods have been employed to connect the armature, which is placed in the car, with the axle. Two armatures—one for each axle—and running in one magnetic field, have thus been fitted. These armatures must run at the same speed as their respective axles, and are therefore heavier than other geared armatures. The reciprocating forces in the coupling rods re-introduce the fundamental difficulties of the steam locomotive, necessitating broad hornblocks and well-fitted joints. These are found to be unnecessary with the perfectly uniform turning effort in other forms of the electric locomotive; the use of coupling rods has therefore not found much favour.

Double Geared. Gearing by means of a worm enables a considerable power to be obtained with a very small motor, but this method is only employed for very small speeds.

Goods' locomotives are frequently made with double spur gears, and the advantage of a comparatively small motor running at a high speed is thus obtained. This method had been formerly used for speeds of 10-20 miles per hour, but the momemtum of the gear together with the jars upon the axle,

caused the teeth to break and the keys to come loose. The system of double gear, or double reduction, is now used only for slow moving machines.

An example may be seen in a two-axled mining engine made for a Terra Cotta Works, by the General Electric Co., U.S. Gauge 2ft. 6in.; the frame is of cast-iron, 9ft. 6in. in length; the wheelbase is 3ft. 4in., and the extreme height exclusive of the trolley pole, which reaches to the overhead conductor, is 3ft. There is only one armature, the shaft of which gears into two intermediate pinion shafts, each of which gears directly into a spur wheel on one of the two main carrying axles. The wheels are 28in. diam., and the traction power 3,000lbs; the speed can reach 6 to 10 miles per hour, and the total weight of the locomotive is 6·7 tons.

Double reduction, bevel and spur gear, enclosed in an oil tight case is employed by Siemens in the 18in. gauge locomotive used by the contractor for the Waterloo and City Electric Railway. The current is supplied by a flexible twin cable attached to a trolley running upon two overhead conductors, having a difference of potential of 200 volts. The motor employed is that known as Siemens H. B. 8/10, and the locomotive will haul 5 tons at a speed of 7 miles per hour on the level, or 3 miles per hour up a grade of 1 in 60. The whole is covered with a canopy. The switch regulator is arranged in a quadrant at either end of the engine. This not only governs the motor, but is connected with the brake lever and head lamp. A pneumatic horn and reversing and emergency switches are also within reach of the driver.*

The framework and gearing of this class of engine are sometimes hung upon stiff springs. A heavy engine was made in 1892 by Messrs. Mather and Platt for some iron works in

* See "The Engineer," August 2nd, 1895.

Sweden. In outward appearance this resembles the City and South London underground railway locomotives,* constructed by Messrs. Mather and Platt, with the assistance of Messrs. Beyer, Peacock, and Co. A 300 volt current is employed, and in the Swedish engine the gearing between the double armature and the axle is in the proportion of 10 to 1.

Single Reduction. By far the greatest number of electric street motors running at the present day are driven by single reduction gearing in the proportion of 4 or 4½ to 1. In the workshops at Pittsburgh and at Lynn these gear-wheel blanks may be seen fixed in rows of automatic gear-cutting machines, in which two complete teeth are cut from the solid blank at each stroke of the machine table.

The extent to which this system of motors has come into use in America may be illustrated by the amount of traffic on the electric roads of Chicago upon a single day which I spent in the Columbian Exhibition. There were 26 miles of electric tramway in the city, upon which ran 51 double motor cars, 10 single motor cars, and 73 trailing cars. Upon this one day in October, 1893, 11,271 car miles were run and 208,575 passengers carried. The electric supply was maintained throughout the day at an average pressure of 540 volts. For 20 hours the average flow of electricity was 1,050 amperes, the maximum output being 17,000 amperes. The coal consumed during the day in producing this electricity was 23 tons.†

The popularity of this overhead trolley system may be further illustrated by the traffic over the electric street railways in Pittsburgh on the 4th July last, when the number of fares taken was equal to the whole population of the city.

The same system is working well on the Roundhay Park tramway in the neighbourhood of Leeds, but the regulations of

* See Institution of Civil Engineers, Feb. 14th, 1893, Dr. Edward Hopkinson. See also page 216.

† See "Engineering," January 11th, 1895.

the city do not yet permit the overhead wire to be used within the city. This tramway* has been well laid. Steel girder rails 9in. deep, and weighing 98lbs. per yard, have been laid upon a bed of concrete 18in. wide. The cars are each fitted with two single reduction motors of 15 HP, and they run about 8 miles per hour, the motor revolving at the rate of 366 per minute. The tramway was completed in August, 1889. It is 8½ miles long and the steepest grade is 1 in 20 for quarter of a mile. The weight of each of these 15 HP motors is 2,060lbs., and that of the spur gearing 215lbs., making together 2 tons of propelling machinery per motor, or 4 tons per car.

The most recent applications of the trolley system in this country are now to be found in Dublin and Bristol. In the latter place the leakage of current, which Mr. Preece has recently† spoken of as affecting the telegraph circuits much more seriously than those of the telephone, has been reduced to a very small amount. Volt meters are connected to the extreme and the power house ends of the return wire to record the leakage.

A recent example of an English-made electric street railway is that erected by Siemens at Hobart, Tasmania. I had an opportunity of examining this shortly before it was opened in September, 1893. It is 8½ miles in length and traverses many hills. The maximum grade is 1 in 17, being the steepest of the English made lines, except that at Brighton, which is 1 in 14. The sharpest curve is 70ft. radius. Three stationary steam engines are coupled direct to three dynamos respectively. These supply a current of 500 volts to the overhead conductor, upon which the trollies of 20 motor cars run.

Very little attention seems to have been given to the strength of motor axles during the early days of electric street cars in

* See Electric Traction, by Reckenzann, 1892.
† See British Association Meeting at Ipswich, 1895.

America. The old horse car axle was loaded with the dead weight of both gearing and magnets until it broke. It was then strengthened and made of Bessemer steel. But recent developments of springs and levers supporting the dead weight, coupled with a more substantial permanent way, have greatly reduced these breakages. There is, however, no constructional difficulty in making the axle as strong as needful, and in the form of a tube if desired.

The Detroit Electric Co. have obtained the advantages of stability, previously claimed for the method of chain driving, by using bevel gears and a hollow shaft driving the axle through helical springs.

Direct Driven. We now come to the direct driven locomotive with its less friction and wear, but larger motor. An example of this has already been described* in the 27 ton experimental machine exhibited and tested in a "Tug of War" at Chicago.

One of the earliest and perhaps most successful of the direct driven locomotives is to be seen on the City and South of London tunnel.† This engine weighs 10½ tons upon two axles, each of which carries, besides its own armature, half-a-ton of the dead weight of its field magnet upon a pair of journals. The other ends of the field magnets which are inclined at an angle of 45° are suspended from a girder spanning the frames. These motors can each exert 50 HP at a speed of 25 miles per hour. While running the current varies between 50 and 100 amperes, though this may rise to 150 amperes upon the steepest grades, and the maximum tractive effort at starting may exceed 1 ton. Westinghouse air brakes are fitted both to engines and train, the air being stored in reservoirs upon the engine and replenished at the terminal station.

---

* See page 203.

† See International Railway Congress, Question VIII., 1895.

The Liverpool Overhead Railway,* the locomotives for which were constructed by the Elwell, Parker Co., is another example of the successful application of the direct driven system. The dead weight upon one axle here reaches about 50 cwt., which is, however, partly supported by helical springs. This railway is too familiar to members to need any description here, but it is worth noting that after two years continual service, some of the motors have run 60,000 miles, and the flanges of the wheels are now being turned.

An interesting experiment has been made this year by some of the Eastern Rail Roads of the United States in adopting electric traction upon some of their non-paying light branch lines. One of these, the Nantasket Beach Railway, was opened for regular electric traffic at reduced fares on 30th June last. It is a branch of the N. Y. N. H & H. R. R., and is 7 miles long. The cross section of the overhead conductor is shaped like a squash with a flat bottom to give bearing surface for the trolley which picks up the 700 volt current. The locomotives are of two sizes, each of which has the appearance of a double bogie covered wagon. The more powerful of these has a 100 HP motor upon each of the four axles, and can exert a pull of 8,000 lbs. The smaller engine has only two axles driven. The rest of the train consists of open passenger cars. Goods are carried in a portion of the locomotive van, and their weight thus increases the adhesion of the locomotive. Air brakes are supplied by motor driven pumps. The wheels are 33in. diam., and the engine weighs 30 tons. The electric motors are cased in water-tight and fireproof covers, an arrangement in use also on the Chicago Metropolitan Elevated Railway. The points of the permanent way and those of the overhead conductor are so arranged that they move together.

* See Minutes of Institution of Civil Engineers, February, 1894, T. Parker.

The Pennsylvania Rail Road Co. has also converted one of its branch lines—from Mount Holly to Burlington—which could not be made to pay when worked by steam. If the experiment proves successful several other branch lines will be converted to electric lines. The overhead conductor is of hard drawn copper, and is fed by a triple braided weather proof cable. The line is 7 miles long, has easy grades, and the goods traffic is light.

The largest electric locomotive yet constructed in America is that for working the Baltimore Belt Line, which consists largely of tunnels. Ordinary railway carriages and wagons are drawn through these tunnels, and electricity was adopted as a motive power to avoid fouling the tunnels with smoke and burnt gases. They are to be painted white and lighted with electricity; but the present precaution of hauling a smoking locomotive with the train is said to increase the smoke nuisance. The line and the locomotives have been described by Dr. Louis Duncan before the railroad telegraph Superintendents in June last, but time will only allow us to notice a few points in the locomotives. They weigh 96 tons, and are carried upon two bogies. Since I had the privilege of seeing one of these locomotives in the workshop of the General Electric Company, Lynn in 1893, much labour and skill has been, doubtless, bestowed upon the engine to bring it to its present condition.

The draw bar pull is calculated to be 47,500lbs.

The wheels, of cast steel, steel tyred, are 5ft. 2in. diam.

The journals measure 6in. × 8¾in.

Wheel base of each truck 6ft. 10in.

Total height 14ft. 3in.

Total length 34ft 8in.

Total width 9ft. 6½in.

The motors have six pole pieces, and are flexibly supported; each motor weighs over 11 tons. The whole of the electrical gear is surmounted by a sheet iron cab, within which are found

a "series parallel" controller, electric air pump, air brakes, air whistle, bell, safety devices, &c. The full draw-bar pull can be exerted up to 15 miles per hour, and half the full draw-bar pull up to 30 miles per hour. The current is supplied at 500 volts. When running at 15 miles per hour with full load 2,700 amperes will flow, and the engine will develop about 1,600 horse power. The motors are run two in series, thus allowing a pressure of 250 volts. to each motor. There is a double road and all four rails compose the return conductor, together with a heavy copper cable laid in a wood trough. The torque is uniform, and it can pull a steam locomotive if the two have equal weight upon their driving or coupled wheels.*

A test was made of this engine on 8th July last when the construction of the shoe for picking up the current proved inadequate for the enormous current required. The conductor consists of two Z irons fixed on a plate 12in. wide, leaving a slot 1in. wide at their lower edges. Within the space enclosed by these two Z irons, slides a shuttle or brass shoe attached to the engine. This shoe is 2ft. long and 7in. wide, and weighs 25lbs. On the day of the test this shoe became red hot, and while hauling a load of 24 loaded coal cars and a steam locomotive it expanded to such an extent that it stuck fast, and the train had to be removed from the tunnel by the steam locomotive in two sections. It is supposed that the heating was caused by the imperfect contact between the slipper and the Z iron conductor, caused by the deposit which had formed due to the moisture from the roof of the tunnel. The speeds attained by this engine have hitherto been slow, but we shall look with interest for the result of further experiments with this largest development of a system which has become so popular in America.†

* For further particulars see "Rail Road Gazette," June 28th, 1895.

† A recent visitor to Baltimore informs me that this engine is now (January, 1896) working regular goods traffic.

The *Heilmann* locomotive, which was built and worked successfully on several main lines of the French railways last year, has called forth much criticism, approaching sometimes almost to ridicule on the part of some leading engineers. But having run regular trains at high speeds we must regard it as hitherto the largest successfully worked electric locomotive.

The peculiarity of this machine is that it carries a complete generating station on board. The electricity is produced as it is required. By running a highly economical engine at a uniform speed, the electricity can be economically produced whether a large or a small amount be required.

The chief advantages of the Heilmann engine have been stated thus—

1. It will run on existing railways.
2. The economy with which the steam can be used in the high speed generating engine.
3. Remarkable smoothness of motion up to 62 miles per hour.
4. Reduction of resistance, the average co-efficient being 18lbs. per ton.
5. A fuel saving of 15% compared with the steam locomotives of the Western of France Railway.

The original Heilmann engine was well illustrated in "Engineering" of June 2nd and 16th, 1893.

The steam engine was made by Mr. Charles Brown. It is a compound horizontal engine, with cylindrical valves; boiler pressure, 12atm. or 180lbs. per square inch; cylinders, 17·67 and 25·56 diam. × 11·8in. stroke; at 360 revolutions it developed 600 HP; at 600 revolutions it developed 1,000 HP.

The oscillation caused by this engine placed across the frame was such as to lead to the adoption of vertical engines in the new Heilmann engine which is now being built.

The Dynamo is a six pole machine producing direct current and measuring 6·56ft. across; armature 4ft. diameter. Output at 360 revolutions = 1,025 amperes at 400 volts = 410 kilowatts = 560 effect HP. There is a vertical engine and exciting dynamo, which is also used for lighting the train.

The motors are eight in number. Each armature surrounds an axle and drives the wheel direct through the intervention of helical springs. Each motor weighs 2·7 tons and has a horsepower = 80.

This engine has been used upon express train service of the Western of France Railway, both near Paris and near Havre. One trial* took place between Paris and Mantes, on Feb. 9th, 1894. The distance is 36 miles, and the grades are up and down, including four miles of 1 in 150, and seven miles of 1 in 200.

SPECIAL TRAIN (DOWN).

Locomotive	120 tons.
5 First Class	63 tons.
2 Vans	
200 Passengers	
	183 tons.

Time, 50 minutes, or average speed 43·75 miles per hour.
Maximum speed 62 miles per hour.

ORDINARY EXPRESS (UP).

6 Cars and 2 Vans and Locomotive = 192 tons.

Speed was 36·25 miles per hour average, and equal to the time table speed.

The experiments with this engine† were so encouraging that the Heilmann syndicate are now building two larger locomotives, making several alterations based upon the experience gained

* See Engineering, May 18th, 1894.
† See Engineering, September 28th, 1894.

with the first engine. The work is being constructed by different firms. In this country Messrs. Willans & Robinson are making the steam engines, and in France the frames are being made at Creusot; while M. Moyen, the Loco. Superintendent of the Western of France Railway, is helping to construct the engines. Their erection is actually being carried out in the workshops of Messrs. Cail, of Paris, where they are expected to be completed in about four months.

The following is a list of the principal differences between the new and the former :—

HEILMANN LOCOMOTIVE.

	Built 1893.	Building 1895.
Boiler	Lentz Type	Standard, Western of France.
Steam Engine	Horizontal, 800 H.P., compound, short stroke, too heavy and bulky.	Willans' Vertical, 1,500 H.P., compact, light, and efficient.
Dynamo	Direct Multipolar, 800 H.P , Brown type.	Direct Multipolar, 1500 H.P., Brown type.
Motors	75 H.P. each at full speed	125 H.P. each at full speed
Weight	120 tons.	120 tons.
Max. Power	About 1.	About 2.
Total Motor H.P. at 62 m. per hour	600 effective.	1,000 effective.
Wght. of Motors (Gramme)	2·7 tons each.	3·3 tons each.
Do. do.	80lbs per H.P.	58lbs. per H.P.
Driving	Armature and wheels rigid.	Armature connected to wheels through elastic coupling.

The existing engine runs in one direction only, viz., with the boiler in front. The machine carries so much apparatus that it has been described as a travelling laboratory.

The economy in fuel claimed for this engine during its trials hauling express trains were scarcely such as to prove the economy of the system compared with good locomotives; but the Heilmann engine, notwithstanding several mechanical defects in the first machine, and the somewhat disparaging remarks of the President of the Institution of Mechanical Engineers,* has some valuable features, and the railway engineers will look with interest for the experiments to be made upon the Paris—Trouville seaside traffic by the new engine, which is expected to be running next Summer.

The subject of heavy electric lomotives is thus seen to be in an experimental stage and surrounded by practical difficulties, which require the skill of the electrician's and mechanic's hand and brain before it can be pronounced commercially successful.

Schemes.—A word should be said about some of the other electric schemes of the last few years, which have not yet been carried to a successful issue.

The Bentley-Knight engine was designed some years ago. It had three pairs of large driving wheels, and was to exert 670 HP, but was never built.†

The Canadian Pacific Railway have had under consideration a scheme of some German engineers to work the traffic of their main line over the Kicking Horse Pass with a long gradiant of 1 in 23 by electricity, to be provided by the boundless water-power of the district. The trains are now drawn through the pass by three locomotives of large size, and it does not seem likely that such heavy and infrequent trains will be hauled by electricity before further advance has been made in the construction of electric locomotives.

Schemes for running express trains by electricity between great centres of population have received considerable attention.

* See President's Address, 1895.

† See the "Electric Motor and its applications," by Martin and Wetzler, 1887.

That of Zypernowski, to connect the capitals of Vienna and Buda Pesth by a railway running 150 miles along the comparatively level banks of the Danube, covering the distance in one hour, shows the direction in which continental schemers have been working. The rails were to weigh 110lbs. per yard, and the lines to be laid 33 feet apart. The wheel flanges were to be 2in. deep, and the speed to reach 160 miles per hour. This was to be effected by high tension current supplied by a feeder to reducing stations, placed at intervals of 10 miles.

The scheme of Dr. Wellington Adams to connect the cities of Chicago and St. Louis was intended to be worked upon the same principle of high tension current and reducing stations. These locomotives were to have two pairs of driving wheels 6ft. diameter, and exerting 800 HP. The distance is 248 miles, and as described by Dr. Adams,* the cost was to be $6,000,000. The railway would be capable of carrying 3,000,000 visitors to the World's Fair at Chicago, in 1893, at a cost of $5 each for the double journey. It is perhaps needless to add that the St. Louis visitors had to avail themselves of the old-fashioned steam railway to visit the Columbian Exhibition.

The possibility of attaining such speeds as Zypernowski and Adams propose has not yet been proved, though we have the statement by Mr. Head, at the recent meetings of the British Association, that 50 miles per hour had been attained by a single electric car, and we are told that† Mr. Weems, at Laurel, Mass., ran an electric locomotive at 116 miles per hour not long ago, using the overhead wire as a conductor.

A more practical step has recently been taken by the Chicago and Northern Pacific Railroad Company in applying for powers to run electric locomotives upon its suburban lines, including a

* See New York Electric Club, June 2nd, 1892.
† See Preller, in Engineering, June 2nd, 1893.

total mileage of 35 miles. I am not aware of any real trials having yet been made on these lines, although the possibilities of carrying out such a scheme are now within reach.

COST.

Hitherto the use of large electric locomotives has been experimental only, and little can be yet known of their cost. It is also unfortunate that so little is known of the cost of construction and working of the Chicago Intramural Railway, which worked so admirably. We must therefore be contented with such information on this head as can be obtained relating to the English third rail lines and the street railways. Since the lavish expenditure at Richmond * many economies have been effected most of all in the standardizing of fittings, motors, dynamos, &c., and their manufacture in great numbers.

From information I gathered in the United States in 1893, and from other figures more recently published by Mr. Philip Dawson,† it may be stated that the initial cost of power house, generating plant, car shed, rolling stock motors, and their immediate accessories is about £1,000 per motor car equipped.

The initial cost of permanent way (exclusive of paving) rail-binding, elevated conductors, wooden poles, insulation, and suspension is about £2,000 per mile of single track. Taking the permanent way alone, it can be laid, including paving, for £4,893 per mile of single track; £9,449 per mile of double 78lbs. step rail.

The cost of operating electric tramways is frequently large during the initial stages, but like every other mechanical contrivance it runs more smoothly as it becomes better understood. The running expenses of the City and South of London Railway for the first half of 1891 were 8·4 pence per mile; for the corresponding half of 1893 they had fallen to 5·31 pence, when

* See Street Railway Motors, H. Haupt, Philadelphia, 1893.
† See "Engineering," 1895.

the cost per Board of Trade Unit, including office expenses, reached 1·56 pence. Again, cost of operating * 6 miles of double track electric line per day of 16 hours, in the United States--

18½ tons of coal for 600 HP.....	$ 40.50
120 motor men and conductors ($ 2).....	240
Repairs to cars, trucks, and motors	140
Repairs to track, overhead construction, and buildings	80
Other items	308·50
Operating 5,700 miles =	$ 809·00

Cost per car mile = 14·04 cents, or about 7 pence.

The cost of operating a cable and an electric line is nearly the same for an equal length of road and the same car mileage. The depreciation of the cable is almost offset by the repairs of the overhead wires and dynamo tenders, other items being the same.

The relative cost of operating tramways by electricity, horses and steam, when each is in regular order, may be taken from the cost of three large typical tramways :—

Electricity—City of London...	5.31	pence.
Horses—Frankfort	8·02	,,
Steam—Birmingham, average of 4 lines.	7·31	,,

The Halle electric trams, among the most successful in Germany, notwithstanding the low fare 1½d., are very comfortable. The cost of working them amounts to 59 % of the receipts, leaving sufficient profit for a dividend of 5·1 %.

The Boston tram system has hitherto cost about 1/- per car mile, which is about the same as that of the old horse-car system. But this cost is being reduced as the system grows, and the cost of operating in the less crowded districts is from 4d. to 6d. per car mile.

* For further information see "The Electric Railway," by Crosby and Bett, 1892.

We are thus brought to the conclusion that there is an important future before the electric locomotive. The chief direction in which it has been successful is in light suburban passenger traffic; superseding not only the horse-trams but also the ordinary railways. It is frequently spoken of as the "poor man's means of travel," and the thickly populated counties of England seem to be a promising field for its introduction. For underground service it has an assured success.

Where water-power is available, or an electric supply already in existence, the operating expenses of electric tramways are low. Without these advantages the operating expenses of a frequent but not too crowded service are lower than those of horse or steam-worked tramways. But for express and heavy traffic upon our main trunk lines the experiments hitherto carried out do not lead us to expect that electricity will supersede steam in the immediate future.

Finally, the Railway Companies would act wisely in developing electric feeding lines in thickly populated districts, otherwise new competing electric railways are likely to spring up which may deprive the older companies of much of their local traffic.

DISCUSSION.

The Chairman, Mr. T. Daniels (ex-President), observed that the subject had been put before the members in a very practical way. He agreed with the author's remark that it would be some time before electric locomotives could be used for heavy traffic, or run at great speeds on the main lines, so that, under those circumstances, steam engine makers would not lose their trade, at any rate, for the present. In respect to their construc-

tion, he did not see how electric motors could compete with steam locomotives, although he admitted they acted very well on the South London Railway. The steam locomotive was now so very simple and economical in construction, that if the question of economy and first cost was considered, the steam motor would remain for some time to come. With regard to the Heilmann locomotive, the Frenchmen seemed to be taking the matter up with more than their usual amount of vigour, but he certainly thought it would cost a good deal of money if it were to be made a success.

Mr. T. Ashbury remarked that it was refreshing to hear such a capital defender of the steam locomotive as their Chairman—sixty or seventy years ago there were many who spoke of it just as the Chairman had spoken of the electric locomotive—that night. It was a very unwise thing to prophesy. The author had certainly given them a very successful and elaborate paper. He (Mr. Ashbury) thought some of the members would remember the time—12 or 13 years ago—when they were invited by Mr. Holroyd Smith to go and see an experimental electric tramcar down at Cornbrook, which was the forerunner of the Blackpool system. Some of them, at that time, thought there was a great future for it, and their anticipations had been realised. And now they were also told that whereas on Mr. Worthington's first visit to America only one electric railway was working successfully, there were on his more recent visit 13,000 miles of electric railway in the States, thus showing the remarkable development that had taken place in that Continent. All must readily admit that they ought to have something better and more pleasant to travel in than steam trams, and he thought they would find in electricity the future power to work their tramway systems. The auther had referred to various examples of electric motors, but he (Mr. Ashbury) thought the

chief point to consider was whether a car or locomotive was self-contained. There appeared to be so many objections as to how the conductors, &c., were arranged, that a self-contained locomotive was undoubtedly the ideal one. He trusted that when the new Heilmann locomotive was ready, the results would be such as to stimulate similar enterprise in this country. The electric locomotive was, in his opinion, the motor of the future, especially for tramway requirements, and when they considered the rapid advance made by electricity in its application to machines, cranes, &c., and the facts revealed to them that night in Mr. Worthington's paper, they were brought to the conclusion that during the next ten years the results of its application in the direction indicated would be such as they could not, at present, form any conception of.

Mr. Joseph Adamson observed that there was not much fear of the Heilmann locomotive driving out the steam locomotive. If they had to transmit, say 1,000 HP, from any given point, there must be some powerful means of communication between the generator and the point at which the power was to be utilised. He did not think they could transmit this power through a cable, or any other system at present known to him, as economically as they could transmit it direct from a pair of steam cylinders. No doubt the electrical system would be advantageous, if they were able to distribute the power over long distances, but the way to do this economically had yet to be found out. The adoption of electric railways would, however, certainly be beneficial in one respect, and that was in the discontinuance of the barbarous way in which the car-horses were frequently driven, owing to frequent stoppages, and the improvement in this respect would more than counterbalance the offence to the "aesthetic" eye caused by the unsightliness of an overhead wire. Then again, he did not like the idea of

waiting till the French had made the electric locomotive a success. Manchester men had always been in the van of engineering enterprise; and if the Heilmann locomotive or the electric locomotive was the best to adopt, it ought to be made in Manchester. The question of cost entered too largely into these discussions, and he could not help contrasting the encouraging manner in which the Americans received new ideas, and tried them, with the cold way in which Englishmen received a new idea, especially as regards electricity. He was quite sure that suburban traffic would, in the future, be worked by electricity. To what extent they would be able to transmit the power required to work goods and express trains he was not prepared to say; he looked upon it as a new thing, and he thought they should give their moral support, if not pecuniary, towards advancing it. With regard to one of the switches described by Mr. Worthington, he was using it to drive one of his drilling machines, which had been working satisfactorily for three or four months.

Mr. Tetlow asked whether in the new Heilmann locomotive the Lenz boiler was being given up because of lack of sufficient steam power.

Mr. R. R. Lister observed that the paper would have been more satisfactory if it had been confined to the description of some one electric railway system or locomotive, and its working, and had given the first cost, cost of maintenance, and other necessary particulars.

The Chairman said the locomotive maintenance might be taken at about 6d. per mile. For tramways and light railways the electricians were getting more economical results than steam engineers, but he did not think they would ever run the high speed locomotive off the track.

Mr. HENRY WEBB said he obeyed the Chairman's call, but he was reminded of the adage, "fools rush in where wise men fear to tread." He knew nothing about electricity, and did not wish publicly to display his ignorance. However, he must thank Mr. Worthington very sincerely for his most excellent paper. He was told last Tuesday by one of the most eminent railway engineers of this district that they might expect an admirable paper, with the facts well arranged and "up to date," and that prophesy had been amply fulfilled. There was one matter upon which he should be glad if the author could give them some information. He looked at the question from the standpoint of a metallurgist. On page 200 the author referred to the "pole pieces" being steel castings with only small allowances of Manganese, Silicon and Phosphorus. He had always been told by electricians that the presence of manganese was fatal to electrical efficiency. In the first motors, pole pieces made of Swedish iron were used, and it was now frequently asked for, but the electricians will not pay the price; yet iron made from pure Swedish ores and melted and worked with charcoal was undoubtedly the best. The analysis of Swedish iron is—

Carbon	·15	Phosphorus	·096
Silicon.....	·036	Manganese	—
Sulphur	—	Iron	99·71

Then for many years the pole pieces were made of scrap iron carefully annealed, the analysis of which is—

Carbon	·19	Phosphorus	·14
Silicon.....	·14	Manganese	—
Sulphur	·16	Iron	99·36

He believed he was the very first to suggest that steel castings might be used, and the pole pieces consequently made much nearer the required shape and size than iron forging could be, and thus save some of the tooling. But he was told they must be *absolutely free from manganese* or they would not be of any

use. He replied they could be so made, if they would allow the carbon to be high, but the electricians said this would make them more difficult to tool, and they must have a soft metal. Yet, what did he find? He had gone to the trouble to analyse many steel castings used for this purpose, and the variation, to him, was surprising; for example, one of the most eminent firms in England get their castings from abroad, and the analysis is—

Carbon	·18	Phosphorus	·05
Silicon.....	·34	Manganese	·61
Sulphur	·05	Iron	99·77

And yet with manganese so very high they said they obtained the requisite electrical efficiency (he thought it was 96 %). Another equally eminent firm used castings of English make, the analysis was—

Carbon	·65	Phosphorus	·05
Silicon.....	·05	Manganese	—
Sulphur	·052	Iron	99·19

Yet he had known castings supplied which, on analysis, showed

Carbon	·32	Phosphorus	·07
Silicon.....	·046	Manganese	—
Sulphur	·05	Iron	99·51

And they were condemned, as the motors did not show the required electrical efficiency by 12 %. Could Mr. Worthington give any explanation of these strange variations? Mr. Worthington said, "the castings are made carefully with risers as large as the castings to secure solidity." This was very wasteful and wholly unnecessary, for by the use of a small quantity of "ferro aluminium" good sound castings could be secured, without large risers.

What the paper said about the Heilmann engine was surprising; to convert steam into electric energy must mean at

least a loss of 5%, and our engineers must try to meet this new departure with a more economical steam locomotive.

He admired the author's caution in the last sentence of the paper, where he said "the Railway Companies would act wisely in developing electric feeding lines in *thickly populated districts*." In these days of agricultural depression, and the many suggested remedies to bring the produce to the consumer, are electric railways; but as the majority would not be in "thickly populated districts," he supposed the author thought this should be done by some other authority, and not by the Railway Companies.

Mr. C. H. Collier referred to several ingenious electrical appliances which he had seen in Hyde—especially two very simple designs in drilling machines, in which a great deal of the usual mechanism was dispensed with to advantage.

Mr. Gilbert Lewis asked whether the weight of the wheels in electric locomotives was of itself sufficient for the traction of the engine, or whether any dead-weight was required. With regard to the question of cost, which was no doubt an important point, it should of course be carefully considered; and before spending their money to any large extent, they should consider whether the thing would eventually be a success. One question which cropped up with regard to electric locomotives was whether they should carry their own power, or be supplied from a central station. Judging from the Manchester Hydraulic Station, it became questionable whether centralisation was a success. He could not see why it should not be more economical than it was, in the above case; either the Corporation were getting a large profit out of it, or there were some defects in the system.

Mr. Hans Renold referred to the use of chains for transmitting the power from the high speed armature shaft to the compara-

tively slow moving car axles. As early as 1882 he said Mr. Volk used chain gear on an electrical car in Brighton, which was running for several years. Messrs. Siemens, of London, who supplied the electrical equipment to the Giants' Causeway lines in 1884, also used his (Mr. Renold's) chain gear. This line with some six or eight cars had now been running for 11 years. In 1885, he supplied some powerful chains to the Bessbrook Electrical Railway, which was electrically equipped by Messrs. Mather & Platt of our city. This line had been doing a very heavy service for 10 years, and the chain gear had proved fairly satisfactory. The Blackpool cars also were running for some time equipped with his chains. Electrical car work seemed to him to be very much like that of cycle driving, where nothing had proved so satisfactory and simple as chain gear. The conditions met with were the following :—

1. A certain amount of flexibility or unrigidness must exist between the power giving and receiving axles.
2. A very great margin of strength must be provided beyond that required for the ordinary work, to meet the sudden startings of the car. (No less a safety than 30 has been found to give satisfactory results.)
3. A great reduction of speed from dynamo to car axle is required, and no large diameter wheels are admissable. All frictional methods have been found wanting, not being able to withstand the grit of the roads or the wet.
4. The transmission of power should be noiseless or nearly so.

Whilst above-named applications could not be cited as completely satisfactory, still they had offered a valuable field for gathering experience, and had formed stepping stones to find a more complete method. For some 10 to 12 months he had now had under test a new form of chain and wheels which had been found very satisfactory, and one more of the several

difficulties which had hitherto retarded Electical Traction would have been solved.

Mr. WORTHINGTON, in replying upon the discussion, said he had probably been rather misunderstood in regard to the the Heilmann locomotive. He did not wish to advocate it, nor put it forward as a successful type. It had not, in his opinion, yet been proved successful. Trials had, it was true, been made up to 60 miles an hour, but they were by no means conclusive, and they must look entirely to the experiments made with the new engine before definitely pronouncing an opinion on the subject. Professor Kennedy had dismissed the subject with words of ridicule, and perhaps this severe treatment of the question had led him (Mr. Worthington) to draw attention to the advantageous use of steam in the Heilmann engine under variations of load, such as was impossible to obtain in the ordinary locomotive, where the piston speed was absolutely dependent upon the rate of travelling. He agreed with Mr. Adamson that if there was anything in the theory of electric locomotives, we ought to seize those theoretical ideas, and work them out in practice, till something tangible was evolved. The English ought to be the first nation in the world in developing new things, when there was something tangible in them, but they were, in this particular instance, unfortunately, far behind other nations—particularly the Americans. With regard to cost, in some cases enormous sums of money had been spent in developing electric locomotives, and he had been told by an American engineer that three years experiments with the Baltimore locomotive had cost £40,000.

As to the cruelty to horses practiced in ordinary street cars, he entirely agreed with Mr. Adamson, and they could find no better title for a paper to be read before the S. P. C. A. than "Electric Locomotives." Referring again to the Heilmann

locomotive, he thought they might leave it for the Frenchmen to develop. It was entirely in the hands of a French syndicate, who would, no doubt, do their utmost to make it a success before any one else touched it. He was glad to hear from Mr. Adamson that he had got hold of a switch that would regulate drilling or any other machines; it must be a very well thought out design.

With regard to the Lenz boiler, he had been informed, though not on the best authority, that it had been given up in the new Heilmann locomotive, not because of want of steam capacity, but owing to the difficulty experienced with the staying. He agreed with Mr. Lister, that a more valuable paper might have been written if he had confined his remarks to the exhaustive consideration of one particular railway. With regard to cost of running electric locomotives, if electric railways were to be made of the size of ordinary railways, this cost would probably be more than was incurred with the present system; but he thought we could not yet advocate the running of electric locomotives on main lines. Where the traffic allowed an interval of about ten minutes or less electric railways could be used with advantage, but where the intervals exceeded this amount the road could be worked at a less cost by steam. For example, where the service was about half an hour or twenty minutes, steam cars were the most economical, but for three or four minutes service, the electric system was the best. This statement had been proved in practice, and as the frequent service last referred to was much the more common in our large towns, the use of electricity in this direction would be appreciated.

Mr. Webb had gone very fully into a most interesting question, as to the steel required for dynamo pole pieces; he might mention that at the works in Lynn, to which he had referred, and which made steel castings for the General Electrical Company, these were made in the same foundry as

common steel castings, and they had therefore to take every precaution, such as making enormous heads, to make them good, as the other castings were made with no risers at all.

With regard to the chemical composition of these poles, the American makers went in for something cheap and as good as they could get it at a reasonable price. He believed they used aluminium to assist in producing a sound casting, although the risers were also made as large as the castings themselves. No doubt Swedish iron was the purest metal for these pole pieces, but mild steel was very much used; in fact, German mild steel was much sought after by English manufacturers. He had been led to think previous to Mr. Webb's statements, that it was a *sine qua non* that manganese should be absent from the pole pieces. The instances noted by Mr. Webb were very curious. He (the speaker) had heard a few weeks ago that at Crewe, where a good many dynamos were made, they had now succeeded in making a dynamo metal which was quite as good, tested electrically, as the best mild steel obtainable from Germany, and that this was being produced at such a cost as would enable it, if sold, to compete very favourably with the German article. He did not know the composition of the Crewe material, but had heard that it contained practically no manganese.

With regard to the weight upon the wheels in electric locomotives, this was generally found sufficient for traction on the smaller lines; on some of the more powerful American engines cast iron was used for some of the parts, where in England wrought iron was used. As to the value of chain driving, if there was a system as efficient as that of gear wheels, the inventor had designed a very ingenious and useful thing. Hitherto the chain had not been popular, because it caught the dust and was not so easily boxed up.

40TH Annual Report

OF THE COUNCIL.

1895.

MANCHESTER:
HERALD & WALKER, TYP., POOL FOLD CHAMBERS, OFF CHAPEL WALKS.
1896.

OFFICERS.

1895.

President:

MR. JOS. NASMITH.

Past-President:

SIR E. LEADER WILLIAMS, M.INST.C.E.

Treasurer:

MR. JAMES WALTHEW.

Trustees:

MR. G. CARTER,
" JOHN WEST, M.I.C.E.
MR. SAML. DIXON,
" T. ASHBURY.

ALDERMAN SIR W. H. BAILEY, J.P.

Council:

MR. H. WEBB, J.P.
" J. BOLAS,
" F. W. REED,
MR. A. SAXON,
" C. R. IORNS,
" W. SPENCER.

Librarian:

MR. J. GIBBON,
21, Wellington Terrace, Reddish.

Secretary:

MR. FRANK HAZELTON,
63, Barrett Street, Old Trafford, Manchester.

ANNUAL MEETING,

14th December, 1895,

Mr. T. Daniels, M.I.Mech.E., in the Chair.

The minutes of the previous meetings having been read and confirmed and signed by the Chairman, he announced to the meeting the result of the ballot for the election of new members.

The election of President and other officers of the Association was then taken with the result as set forth on opposite page.

Resolved unanimously.—"That the cordial thanks of the members be and are hereby tendered to Sir E. Leader Williams, for his services in the Presidential Chair during the past year."

AMENDMENT OF RULE 7.

It was proposed by Mr. E. G. Constantine, seconded by Mr. James Walthew, and resolved unanimously, that the second paragraph, namely—

> "Each candidate shall be proposed and seconded by two members, on a meeting night, at least one month previous to the day of election, who shall state to the meeting the antecedents, qualifications, &c., of the candidate, and give such other information as the members present may require; and in all cases, where practicable, the Committee shall make enquiry as to the elegibility of the candidate."

Shall be expunged and the following substituted:—

> "Every candidate for membership shall be nominated on a meeting night at least one month previous to the day of election; and a proposal form setting forth the candidate's antecedents and qualifications, and signed by two members as proposer and seconder, shall be forwarded to the Secretary for the consideration of the Committee twenty-one days before the day of election to enable them to make enquiries as to the elegibility of the candidate. If the candidature be approved by the Committee, the candidate's qualifications shall be read from the proposal form to the members present on the night of election, and the proposer and seconder shall add such further information as they may deem desirable, or as the members may require."

Annual Report of Council,

1895.

The Council have pleasure in presenting the 40th Annual Report of Proceedings.

To the membership roll during the year have been added—

13 Honorary Annual Members.
13 Ordinary Members.
—
Total 26

and after taking into account the loss by death, resignation and erasure, the total number of names of all classes on the roll amounts to 368, as against 360 in the previous year, namely:—

27 Honorary Life Members.
126 Honorary Annual Members.
215 Ordinary Members.

Upon reference to the Financial Statement as certified by the auditors (see pages 266-7), it will be seen that the balance standing to the credit of the Association after payment of all accounts due up to the 31st December, amounts to £3,645. 15s. 1d., as against £3,469. 3s. 6d., at the close of the preceding year, thus showing a surplus of £176. 11s. 7d. on the year's working.

They are pleased to report that the payment to the superannuant members has been at the rate of 7/- per week, and that during the coming year this allowance will be increased to 8/6 per week.

It is with profound regret the Council have to record that during the year death has removed the following members,

brief memoirs of whom are appended on pages 264 and 265. In accordance with resolutions, letters of condolence and sympathy have been forwarded to the families of the deceased members:—

Burnet, L. - - - -	Glasgow.
Farmer, Chris. - - -	Salford.
Hall, James - - -	Do.
Kilgour, Robert - - -	London.
Meixner, F. - - -	Manchester.
Vickers, George - - -	Salford.

The following gentlemen have resigned their membership during the past year:—

Goodfellow, F. - - -	Hyde.
Heaton, Ed. - - -	Manchester.
Pritchard, J. - - -	Oldham.
Wilson, S. - - - -	Manchester.
Wrigley, F. - - -	Salford.

The following gentlemen have ceased to be Members during the past year:—

Jones, M. - - - -	London.
Martin, H. W. - - -	Manchester.
Ridgway, J. - - -	Do.
Stansfield, S. - - -	Do.
Scott, F. - - - -	Sheffield.
Wood, W. - - - -	Manchester.
Wrigley, J. S. B. - -	Oldham.

The following gentlemen have been added to the Membership Roll during the past year:—

HONORARY MEMBERS.

Bond, J. T. - - -	Bolton.
Day, C. - - - -	Davenport.
Grandison, J. L. - -	Salford.
Hewitt, T. P. - - -	Prescot.
Hunter, W. H. - - -	Stretford.
Jenkinson, T. - - -	St. Helens.
Kelsall, J. E. - - -	Bolton.

Mottram, R. - - -	Salford.
Row, O. M. - -	Flixton.
Stubbs, J. H. - - -	Manchester.
Spencer, H. B. - - -	Do.
Wrigley, F. - - -	Todmorden.
Wick, F. J. - - -	Manchester.

ORDINARY MEMBERS.

Baines, E. N. - - -	Longsight.
Beard, R. H. - - -	West Gorton.
Buckley, E. W. - - -	Manchester.
Daniels, G. - - -	Reddish.
Durnford, J. W. - - -	Manchester.
Halliwell, H. - - -	Do.
Hepworth, J. W. - -	Do.
Muddiman, J. - - -	Altrincham.
Mercer, C. - - - -	Hollinwood.
Nuttall, J. H. - . -	Clayton.
Oexle, K. J. - - -	Manchester.
Phillips, J. R. - - -	Do.
Southworth, J. T. - -	Do.

Similar to last year, 17 General Meetings of the Association have been held, 12 of which having been for literary or business purposes, three to inspections and the remainder to Social gatherings. The visits of inspection were as follows :—

June 27.—Barrow-in-Furness for inspection of the works of the Naval Construction and Armament Company, Ltd. Attendance 94.

Sept. 14.—Liverpool for inspection of the White Star S.S. "Teutonic," and the Electric Generating Station of the Overhead Railway. Attendance 130.

Oct. 12.—Inspection of the Salford Corporation Gas Works. Attendance 70.

Papers Read and Discussions held during the Year.

Jan. 12.—**Inaugural Address** by the President, Sir E. Leader Williams, on "**The Suez and Manchester Ship Canals.**"

„ 26.—On "**Electricity as the future Motive Power in the Textile Industries,**" by Messrs. D. Selby Bigge and G. H. Firth.

Feb. 23.—Discussion on ditto.

March 9.—Discussion on "**Steel Castings,**" introduced by Mr. Alfred Saxon.

„ 30.—On "**Gas Lighting for Public and Private Buildings,**" by Mr. John West, M.Inst.,C.E.

Oct. 26.—On "**Cylinder Condensation, and some means of combating same,**" by Mr. W. H. Booth, London.

Nov. 9.—On "**Pistons and Piston Valves,**" by Mr. J. Butterworth, Manchester.

„ 23.—On "**Electric Locomotives,**" by Mr. Edgar Worthington, Manchester.

The Council have pleasure in recording their great thanks to the Directors of the Naval Construction and Armaments Co. for allowing the members to so unrestrictedly inspect their famous works.

Similarly, their thanks are due to Messrs. Ismay, Imrie & Co., of the White Star Line, for the kindness and hospitality which characterised their reception of the members and ladies during their visit to the *Teutonic*, which certainly rendered this meeting an exceptional success.

Finally, to Mr. S. Y. Shoubridge, the Council are indebted for the attention and courtesy he showed to the members who visited Salford Corporation Gasworks.

ANNIVERSARY DINNER.

The Thirty-ninth Anniversary Dinner of the Association was held on Saturday evening, February 9th, at the Grand Hotel. Sir E. Leader Williams, President of the Association, occupied the chair.

After the toast of "The Queen and the Royal Family," submitted by the Chairman,

Mr. H. Webb (Bury), in the absence of Mr. J. K. Bythell, proposed the toast of "Our Municipal Corporations." In doing so, he said he was afraid municipal corporations were making a mistake in overdoing the matter of technical education. It was not necessary for towns to spend enormous sums in technical schools and technical education, with a great deal of consequent overlapping. He was afraid that in the city of Manchester, which was in the very first rank of municipal corporations, and the neighbouring borough of Salford, unless they were very careful, a considerable amount of foolish money would be spent in overlapping and doing things which other institutions were already doing well.

Sir B. T. Leech, in responding on behalf of the Corporation of Manchester, said there was no country in the world where municipal institutions were carried out in so pure a manner as in England. Manchester, he held, was a fair sample of a well-governed city. He was perfectly convinced that in the North of England they took a right and liberal view in respect to municipal institutions. They were told by their friends in the South that they had gone very far ahead. He believed they had rightly done so. In London many large works were carried out by private companies. In Manchester they took those things into their own hands, and he believed, with the best results,

The Corporations carried on the gasworks, the waterworks, the tramways, the markets, and a great many other of the most important institutions, and he was not ashamed of the way in which those various enterprises were conducted. There was no city which had larger commitments than Manchester. We were engaged in a great sewage scheme, and we had introduced hydraulics into the city, and in that matter the Corporation were fully alive to the value of the services rendered by the gentlemen whom he addressed. (Hear, hear.) He hoped they would not, as the proposer of the toast had said, go mad upon the subject of technical instruction. There was a large amount of leeway to be made up, because we found that we were behindhand when we looked at our Continental neighbours. The Corporation were determined to make good that deficiency, and he trusted that while they carried out their scheme of technical instruction in a way which should render it inferior to that of no place in the world, there need be no fear that they would go to too great extremes. It was a matter for congratulation to those present that their chairman was the engineer of the Manchester Ship Canal—a work of which not only Manchester and the county of Lancaster, but the whole of England might well be proud. (Hear, hear.) Many people had said that the Corporation had no business to interfere with what was called a private enterprise; but he believed there was something more to be done than carrying out gas and water works. He believed Corporations should take an interest in everything that would help forward the prosperity of a city. (Hear, hear.) He believed it was perfectly right that the Corporation should come to the help of that great enterprise, which was calculated to so materially increase the prosperity of the city. In connection with that subject, he should like to bear testimony to the great work their President had done with regard to it; and he could not forget the work of another

distinguished past member of that Association—he referred to the late Mr. Daniel Adamson. (Applause.) They would always treat Mr. Adamson's memory with the greatest possible respect. He felt sure the canal would do a good work for Manchester, and, indeed, the good it was doing was already apparent.

The MAYOR of Salford (Mr. Alderman Mottram) also responded. He said he noticed that at the next meeting of the Manchester Corporation a motion was to be brought forward advocating the amalgamation of Manchester and Salford. Before Salford joined Manchester they would take great care that Salford suffered no disadvantage from amalgamation. Manchester and Salford were two great towns, and in his view it would be better that they should be separate municipalities. If, however, Manchester could prove to the people of Salford that there were advantages in amalgamation, the people of that borough would be prepared to receive the attentions of Manchester. With reference to what had been said about technical instruction, the question was of the greatest importance. They in Salford were erecting a technical school, and, he thought, with a population of over 200,000, they were entitled to have such a school and were well qualified to support it. He could promise that their school would not, if it were at all possible, clash with Manchester in any way. They intended to take up subjects which Manchester would not teach, and he hoped Manchester would follow the same course in regard to Salford. Salford was doing very well, in spite of little rumours that got abroad about deficits. (Laughter.) Theirs was not the only borough which had a deficit only they happened to be found out. (Renewed laughter.)

The MAYOR of Bury (Mr. Alderman Hall) also responded.

Mr. T. ASHBURY proposed the toast of "Our Guests."

Mr. C. H. Bingham, Master Cutler, of Sheffield, in responding, gave some interesting particulars as to the Cutlers' Company of Sheffield, and its control of the trade marks of Sheffield and the district known as Hallamshire. When an Act was recently passed creating a central department for the control of trade marks it was gratifying to the people of Sheffield to find that the old system which had worked so well in that town was recognised, and they were now in the unique position that the control of their own trademark business was in the hands of the Cutlers' Company. He was glad to have the opportunity of recognising the important services rendered to the community by the engineering profession. They could not but feel that it was to the engineering and like professions that the country must largely look for help in the future to get them out of the present depressed condition of commerce. (Hear, hear.)

Mr. T. P. Hewitt spoke of the revival of the watch-making industry at Prescot, and claimed that in their small way they could claim kinship with the engineers of the country. At present they were suffering under an order from the Government, who said that because they sold gold and silver they must have a licence. They felt this to be most unjust, and they were determined to resist it. (Hear, hear.)

Sir Joseph Leigh, M.P., proposed "Prosperity to the Association."

The President, in replying to the toast, said he desired in no way to separate the mechanical from the civil engineer. Without the mechanical engineer the Ship Canal could not have been made. If they had trusted in the construction of the canal to manual labour it would have taken years and years, and the interest on the money would have rolled up until the canal could not have been made. Without the steam navvies

made in England, together with the German and French steam navvies which were employed, they would not have been able to get out fifty million cubic yards of excavation in anything like reasonable time. When mechanical engineers went down the canal they might look at the Barton aqueduct, at the swing bridges, at the hydraulic arrangements at the gates, and so forth, and feel proud of their profession. As a matter of fact the world could not get on without engineers. No one could judge who had not seen the thousands of drawings in the canal office of the work which was entailed in the construction of the canal. Without the help not only of those who had given their time and money as directors and promotors, but of the able engineering staff who assisted him, the work could never have been finished. He took no more credit than his share for the successful accomplishment of that work. He noticed with some amount of pride a letter in the newspapers that morning from the marine superintendent of the Company which owned the steamship Janeta, which had just taken the largest cargo that had gone down the canal—viz., 5,200 tons of coal from Partington. The superintendent stated that the passage was made "without a scratch." That vessel drew 24ft. of water; and it must be obvious if a ship of the size of the Janeta, and drawing that draught of water, could navigate the canal "without a scratch," and other vessels met with scratches, it was not so much the fault of the canal as of the management of the vessels. (Hear, hear.) A great work like that of the canal could not be made a success all at once. They had to get traffic from some competitors right and left, and the struggle was very great. He much regretted that the chairman of the Canal Company was not present, because he could have told them something of those struggles. He (Sir E. Leader Williams) knew what those struggles were, and how great was the competition. There were plenty of people ready to take

advantage of the canal—to send their goods to Liverpool and take the benefit of the reductions of freight it had brought about. The Company could not help that, but must go on, because they were satisfied that in the end the canal must be a success. (Hear, hear.) There was no reason, he argued, why they should not in time have shipbuilding works on the banks of the canal. (Hear, hear.)

Sir W. H. Bailey submitted the toast of "The Engineering Profession," which was responded to by Mr. A. Ross (Manchester, Sheffield, and Lincolnshire Railway.)

The health of the President, proposed by Mr. T. Daniels, brought the proceedings to a close.

During the evening a very enjoyable musical programme was rendered by a party of singers under the direction of Mr. J. H. Greenwood.

OPENING OF DISCUSSION SESSION.

The members of the above Association opened the winter session on Saturday, October 12th, by an inspection of the Salford Corporation Gasworks during the afternoon, and subsequently by a tea at the Grand Hotel, followed by a discussion on the "Manchester School of Engineers." The party visiting the Gasworks* during the afternoon numbered about 70, and were conducted over the various departments by the engineer, Mr. S. Y. Shoubridge, and his assistants.

At the meeting held in the evening at the Grand Hotel, the chair was occupied by Sir E. Leader Williams, the President, and there was a numerous attendance.

* See page 262 for description.

Mr. T. Daniels, the Vice-President proposed, and Mr. E. G. Constantine seconded a vote of thanks to the Salford Corporation and to Mr. Shoubridge, for the kindness shown to the members during the inspection of the works in the afternoon, both gentlemen speaking in very complimentary terms of the excellent condition in which they found every department they had gone through. Mr. Constantine added that a great deal had been said a few years back during the gas-stokers' strike with regard to the dreadful conditions under which men laboured in the gasworks. If, however, other gasworks were conducted on the same lines as those of the Salford Corporation, he could not see that the men had much ground for complaint as to the conditions under which they laboured, and certainly they were not to be compared with the conditions under which firemen had to work on board steamships at sea.

Mr. Shoubridge, in responding to the vote, remarked that he hoped from what they had seen that day they would be satisfied that the gas industry was not in the moribund condition that some people said it was, but that with modern appliances for gas manufacture and new and improved burners for its consumption, it had still a long life before it.

Mr. T. Daniels, in the course of a short address, next brought forward as a subject for discussion the "Manchester School of Engineers," and gave a short review of the life and work of Sir William Fairbairn, who, he said, was one of the principal corner-stones of the past history of the engineering profession of that district.

In the discussion which followed, Mr. A. Saxon remarked that in Sir William Fairbairn's time he must have had a better stamp of workmen about him than engineers had

to-day, when they considered the excellence of the work accomplished under the great difficulties with which they had then to contend, with regard to poor and inferior tools. A number of engines constructed by Sir William Fairbairn were still running in Lancashire and Yorkshire, and showed the excellence of the work done in his time under very great difficulties and disadvantages.

Mr. Webb remarked that the system of mechanical tests introduced by Sir William Fairbairn was amongst the most important work he accomplished, and with the further modern development of chemical analysis they had a complete and thorough method of testing all material.

Mr. Kelsall having spoken on the subject of chemical analysis, which, coupled with mechanical tests, enabled them to know exactly what kind of material they were using, Mr. Webb added that great service had also been rendered in this direction by the late David Adamson, who tested every plate put into a boiler.

The President referred to the tubular bridges erected by Sir William Fairbairn, several of which had been built for him (Sir Leader Williams) many years ago, in the Cheshire salt district, where they had stood tests which no other bridge had had to undergo.

Mr. Daniels having briefly brought the discussion to a close, said that at a future meeting he would bring before them some interesting information with regard to the engineering work of Mr. Nasmyth, another of the prominent engineers of the Manchester district.

LIBRARY.

The following new books have been purchased and added to the Library:—

Alternate Current Transformer. 2 vols.	Fleming, J. A.
Alternating Currents of Electricity.	Blakesley, T. A.
Alternating Currents, Polyphase.	Hospitalier.
Civil Engineers Pocket Book.	Trautwine, J. C.
Dynamo, The.	Hawkins & Wallis.
Dynamo Machinery.	Hopkinson, J.
Electricity, A B C of. 2 additional copies.	Meadowcroft, W. H.
Electric Lamps and Electric Lighting.	Fleming, J. A.
Electric Current, how produced and how used.	Walmsley, R. M.
Machine Design, Elements of. Parts I. and II.	Unwin.
Mechanical Engineers Reference Book for Machine and Boiler Construction	Foley Nelson.
Steam Engine, Practical Treatise. 2nd edition.	Rigg.
Steam Power and Mill Work.	Sutcliffe, G. W.
Steel Works' Analysis.	Arnold, J. O.
Telegraphy.	Preece & Sivewright.
Telephony.	Preece & Stubbs.

The Council have pleasure in acknowledging the following donations to the Library:—

The Indicator and Engine and Boiler Testing.
Presented by the Author, Mr. C. Day, Member.

Economisers: Detailed Reports of two series of tests on the relative value of heating the Feed Water for Steam Boilers by Economisers of Green's type, and the circulating system, made by the four principal Insurance Companies.
Presented by Mr. J. Parker, Member.

Screws and Screw Cutting. Presented by the Britannia Co.

Gas Stoking and Labour-saving Machinery.
Presented by Mr. John West, Member.

The Association exchanges Transactions with the following :—

American Institute of Mining Engineers.
,, Society of Mechanical Engineers.
Canadian Society of Civil Engineers.
Engine, Boiler, and Employers Liability Insurance Company.
Franklin Institute, America.
Institution of Civil Engineers of England.
,, Engineers and Shipbuilders in Scotland.
,, Mechanical Engineers.
Iron and Steel Institute.
Liverpool Engineering Society.
Manchester Geological Society.
,, Literary and Philosophical Society.
Midland Institute of Mining, Civil, and Mechanical Engineers.
Mining Association and Institute of Cornwall.
Mining Institute of Scotland.
National Boiler Insurance Co.
North of England Institute of Mining and Mechanical Engineers.
North-East Coast of Engineers and Shipbuilders.
South Wales Institute of Engineers.
Society of Engineers.

The following Publications are received periodically :—

Colliery Guardian.
Electrical Review.
Engineer.
Engineering.
Industries and Iron.
Iron and Steel Trades' Review.
Marine Engineer.
Mechanical World.
Practical Engineer.
Textile Mercury.
,, Recorder.

REPORTS OF EXCURSIONS.

VISIT TO BARROW-IN-FURNESS, THURSDAY, JUNE 27th.

The Association devoted the first of its usual summer excursions to centres of engineering interest, to visiting the extensive works of the Naval Construction and Armaments Co., at Barrow-in-Furness, permission to inspect which having been very kindly granted by the directors. The party, which numbered upwards of a hundred, was conveyed by special train from Manchester, and, after luncheon at the Imperial Hotel, reached the works at one o'clock. Every facility was there afforded for a complete inspection of the marine engineering plant and all work in progress, the heads of the several departments being deputed to conduct the members all through the engineering shops and the shipbuilding yards. The inspection, which was full of interest throughout, occupied the whole of the remainder of the day, and commenced with a tour through the erecting and boiler shops, iron and brass foundries, and then on to the shipbuilding yard, where the chief portion of the time was occupied in going over several of the war vessels in hand for the Government. The most important work which the firm have on hand is the building of H.M.S. *Powerful*, a first-class cruiser, and sister ship to the *Terrible*, recently launched by Messrs. J. & G. Thomson, Clydebank. The engines for this vessel, which are well advanced, were seen in course of construction in the erecting shop, and consist of two sets of vertical triple-expansion engines, with four cranks, the special feature being the introduction of two low-pressure cylinders, the diameter of the cylinders being 45in. high-pressure, 70in. intermediate, and 76in. for the two low-pressure cylinders, the stroke of all the cylinders being 4ft., and the I.H.P. of the engines is expected to be 25,000 without forced draught. The chief interest, however, perhaps centred in the Belleville water-tube type of boilers, which are to supply steam for these engines, and respecting which so much discussion has recently taken place in Parliament. There are to be forty-eight of these water-tube boilers, each having about 120 tubes, and the total length of these tubes, if placed end to end, would, it was estimated, be something like 9¼ miles. Each boiler is to be independent, so that in case of accident to any one boiler it can be readily thrown out, and there would be no interruption of the continued supply of steam for the remaining forty-seven. The total heating service of these boilers is about 68,000 square feet, with a bar surface in the grates of about 2,200 square feet; the working steam pressure in the boiler is to be 260lbs. per square inch, which will be

reduced to 210lbs. per square inch at the engines. To convey smoke and products of combustion away from the furnaces there are to be four funnels having a total height of about 80ft. above the fire-bars.

The hull of the *Powerful*, which was going through the finishing preparations prior to launching, was gone through from end to end and the various special points fully explained to the members. This vessel is 521ft. 3in. long on the water line, 71ft. 6in. beam, the displacement being over 14,000 tons at 27ft. draft. She is to have no side armour, the protective element being in the armoured deck, which extends the whole length of the vessel with a maximum thickness of 4in., tapering off to 3in. at the ends, and the armament is to consist of 53 guns and four torpedo discharge tubes.

Amongst other Government vessels in hand, were the *Juno* and *Doris*, second-class cruisers, which are practically duplicates of H.M.S. *Latona*, *Melampus* and *Naiad*, built by the Company in 1889, and which have given great satisfaction. These vessels are 350ft. long by 54ft. wide, having 5,618 tons displacement and a draft of 20ft.

Another important and very interesting piece of marine engineering work in progress, portions of which, including the specially-designed sand-pumps, were seen in course of construction, in the engine shops, was a sand-dredger for the Mersey Dock Board, which is to be practically a duplicate of the *Brancker*, built by the Company in 1893, and which has proved very successful for the special purpose for which it was designed, the *Brancker* having removed from the Mersey bars as much as 180,000 tons of sand in one week, and largely contributed towards effecting the improvements which are now enabling the largest Atlantic liners to be berthed close to the landing-stage, thus saving the tedious process of conveying passengers and luggage to the vessels in mid-stream.

Amongst other work inspected was the twin-screw steamer, *Duke of Lancaster*, built to the order of the L. & Y. and L. & N. W. Railway Cos. for their Fleetwood and Belfast traffic, and which was in the hands of the painters prior to being placed on her station.

Subsequently the party returned to the Imperial Hotel and had tea. The chair was occupied by Mr. Thomas Daniels, in the absence of the President of the Association, Sir E. Leader Williams. He was supported by Mr. Buckley, ex-Mayor of Oldham, Mr. H. Webb, J.P., and many of the leading engineers of Manchester.

The Chairman, in a few opening remarks, read letters from Sir E. Leader Williams and Sir W. H. Bailey, regretting their absence. He said it had

given great pleasure to see through the large works of the Naval Construction and Armaments Co., for it had proved of great interest to him. They had seen the large ships on the stocks, but for his own part, he was not a believer in large ships, and would sooner have half-a-dozen smaller ones than two big ones.

Mr. Buckley said he had very great pleasure in proposing a vote of thanks to the Naval Construction and Armaments Co. for their kindness in permitting such a large body to pass through their works. These works were materially different from those they were in the habit of seeing, and this fact had added very much to their enjoyment, Such occasions gave them an opportunity of rubbing together, and learning something, and he was sure he was only expressing the desire of all the members when he said he hoped this, although the first, would not be the last visit of the Association to Barrow. (Applause.)

Mr. Webb said it gave him much pleasure in seconding the vote of thanks to the Naval Construction and Armaments Co. All present he was sure were aware that right through the history of the world that nation that had paid most attention to naval matters had always been the leading nation. They could trace that if they looked right away back. England had always looked to her Naval strength, and to-day she controlled three-quarters of the carrying power of the world. England held supremacy in the world, and this was due to her Navy. In going through the works of the Naval Construction and Armaments Co., he was struck with a few things, and one was that land must have been moderate in price, and he had asked what the land had cost, and had got the answer that it had cost nothing at all. He would like to have a few yards at that price. He was very much struck with the height, width, and room in the shops, for it was quite different from what they were used to seeing—places where everything was crammed, and people could scarcely move about. He had been greatly interested in the *Powerful*. There was a great mass of metal in it, and no doubt all present had noticed the stem, stern post, and rudder, which were of phosphor-bronze, and on inquiry he was told that there were some 44 tons, the material costing 1s. a lb. He was very pleased to have seen that ship in construction, for it showed how the ratepayers' money was spent. The one great thing that struck him was that behind all this there must be good brains, for after all, all this work was done in the drawing office. That was the principal part. He did not know how the other sections fared, but the draughtsmen who showed them round were most obliging. They had

been most liberally and most generously treated, and their best thanks were due to the Naval Construction and Armaments Company. (Loud Applause.

The Chairman said owing to being very busy, none of the officials of the Naval Construction and Armaments Company were present, but he would see that this expression of thanks was conveyed to the Naval Construction and Armaments Co.

The company then proceeded to the station, returning to Manchester at 7 o'clock by a special train.

VISIT TO LIVERPOOL, SATURDAY, SEPTEMBER 14th.

Inspection of the "Teutonic."

On Saturday afternoon, September 14th, 130 members and ladies visited Liverpool, and inspected the White Star Atlantic steamer *Teutonic*, which had been freely thrown open to the members by Messrs. Ismay, Imrie & Co. Some two or three hours were spent upon the steamer, which had been berthed in the Langton Dock after her last passage from New York, the elegantly-equipped saloons, state-rooms, &c., being, of course, specially interesting to the ladies of the party, whilst the members of the Association paid more particular attention to the engine-rooms and the various mechanical arrangements connected with the ship. The engine-rooms, shaft tunnel, stokeholds, &c., were lit up throughout by electricity for the special inspection of the members, and the excellent conditions in which every part of the ship below deck was kept was a matter of general comment, the engine-rooms, and shaft tunnels being models of cleanliness and careful attention. The party was, before leaving the ship, invited to afternoon tea in the large saloon, Mr. Thomas Daniels, the ex-President, in the unavoidable absence of Sir E. Leader Williams, occupying the chair.

A vote of thanks, on the motion of Mr. Councillor Saxon, seconded by Mr. Walthew, was passed to the Company for their kindness in throwing open the vessel so unrestrictedly for the inspection of the members, and it was added that the mechanical arrangements of the ship had called forth the praise and admiration of all. Returning to Liverpool by the Overhead Dock Railway, many of the members availed themselves of the opportunity to visit the electric generating station, the details of which were explained by Mr. G. B. Cottrell, general manager and engineer.

Tea was subsequently served at the Bear's Paw Restaurant, after which the party returned to Manchester. The excursion all through was one of exceptional interest and enjoyment.

SALFORD CORPORATION GASWORKS.

The Regent Road Works and the Liverpool Street Works are situated on either side of the London and North Western Railway to Liverpool, and are connected by a foot-bridge. They were commenced in 1858, and cover an area of 12½ acres.

At the Regent Road Works there are two retort houses, containing together 212 through retorts, capable of carbonizing 237 tons of coal, and producing 2,370,000 cubic feet of gas per day. In the larger of these two houses the work of charging and drawing the retorts is effected by machines actuated by hydraulic pressure. The coal for use in this house passes direct from railway trucks into coal breakers underneath, where it is broken to a convenient size. It is then elevated and conveyed to the charging machines in the retort house by Woodward's conveyors, which tip the coal into hoppers on the charging machines; and from these it is fed into the scoops which put it into the retorts. The average time taken by the machines in drawing the coke out of a retort and putting in a fresh charge of coal is one minute.

The hydraulic power is obtained by means of a pair of high pressure horizontal engines, with cylinders 12 inches diameter by 15 inches stroke, driving two double-acting pumps 6½ to 4½ inches diameter. The hydraulic pressure employed in the machines is 175lbs. per square inch. The coal-breakers and conveyors are driven by two high-pressure horizontal engines, with cylinders 12 inches diameter and 18 inches stroke. The machinery was designed by Mr. William Foulis, Gas Engineer to the Corporation of Glasgow, and supplied by Messrs. Adam Woodward & Sons, of Manchester.

There are two pairs of horizontal reciprocating gas exhausters, each pair capable of passing 80,000 cubic feet of gas per hour, driven by high-pressure steam engines with cylinders nine inches diameter and 20 inches stroke. The crude gas is first passed through a condenser, consisting of a number of horizontal pipes 10 inches diameter, of which a portion are exposed to the air, and the remainder immersed in water. It is here cooled to the temperature of the atmosphere, and then passes through two Livesey washers, where the tar is removed. From these it is forced through three tower-scrubbers 50 feet high and 12 feet diameter, to remove the ammonia. It then passes through six purifiers 30 feet by 30 feet, filled with lime and oxide of iron, where the remaining impurities are taken out. From these it goes through the station meters into the gasholders.

There are two telescopic gasholders; one 100 feet diameter, with two lifts each 24 feet high, having a total capacity of 400,000 cubic feet; and the other 150 feet diameter, with four lifts each 30 feet high, having a total capacity of 2,000,000 cubic feet.

The Liverpool Street Works have two retort houses, the first containing 192 ⌓ retorts 20 feet long by 22 inches wide and 16 inches high, heated by regenerative furnaces. They carbonize 264 tons of coal, and produce 2,640,000 cubic feet of gas per day. The coal for these retorts is supplied in railway trucks, which are lifted by two 20-ton hydraulic wagon hoists on to elevated railways over the coal stores. There are two pairs of double-acting-hydraulic pumps 3⅜ to 2¼ inches diameter and 18 inches stroke, driven by high pressure horizontal steam engines with cylinders 12 inches diameter and 18 inches stroke. The hydraulic machinery and engines were manufactured by Messrs. Tannett Walker & Co., of Leeds.

The other retort house has just been completed. It is designed to contain four benches of 72 retorts each, but at present only one bench is erected. These retorts are built at an angle of 32°, and will be charged with coal from the upper end by gravity. A considerable saving in labour is thereby effected. The coal falls from railway trucks into a coalbreaker underground, and after being broken is lifted by an elevator into large hoppers, placed above the retort bench. A smaller hopper which travels on rails in front of the retort bench conveys the coal from the large hopper to the retorts as required. In emptying the retorts, the lid at the lower end is opened, and the coke slides out into barrows placed beneath. The coalbreaker and elevator are driven by a 14-H.P. Otto gas engine, with cylinder 11½ inches diameter by 1 foot 9 inches stroke, made by Messrs. Crossley Brothers of Manchester. The elevators, conveyors, and coalbreaker were supplied by West's Gas improvement Co. of Miles Platting. When fully equipped this retort house will carbonize 400 tons of coal, and produce four million cubic feet of gas per day. There are two pairs of rotary gas-exhausters made by Messrs. Laidlaw and Sons of Glasgow. Each pair is driven by a high-pressure steam-engine with cylinder 16 inches diameter by 22 inches stroke, and is capable of passing 200,000 cubic feet of gas per hour. There is an annular vertical atmospheric condenser, and a vertical tubular condenser for cooling the gas by water. There are two rotary washers, and four tower scrubbers, the latter 12 feet diameter and 60 feet high. The purifiers are six in number, 24 feet by 24 feet; their lids are lifted by hydraulic pressure.

The ammoniacal liquor produced at all the works is converted into Sulphate of Ammonia by means of a Feldman sulphate apparatus; last year 14,000 tons of liquor were treated, and 1,250 tons of sulphate made.

The water required for cooling and washing the gas, working the hydraulic machinery, quenching coke, &c., is obtained from an artesian well, which was sunk on the works by Messrs. Mather and Platt of Salford. The well is 500 feet deep, and varies from 26½ to 15 inches diameter. The pump is 12 inches diameter by 36 inches stroke, and is driven through helical gearing by a horizontal steam-engine having a single cylinder 12 inches diameter by 16 inches stroke. The well yields about 10,000 gallons of water per hour.

OBITUARY.

Lindsay Burnet was the second son of Mr. John Burnet, father of the architectural profession in Glasgow, and was one of the younger school of engineers, and had already made a name for himself in the construction of steam boilers, the special department of his profession to which he devoted his skill and his business abilities. The major part of his apprenticeship was served in the works of Messrs. Barclay, Curle & Co., Whiteinch, and finished with Messrs. T. Wingate & Co., Whiteinch, a firm now defunct, who were well known for their extensive work in the building of steam dredging plant. For a short time, after the expiry of his apprenticeship term, he went to sea in order to get further insight into the business of mechanical engineering. Subsequently he settled in London for some time, and entered the office of Messrs. Bruce & Batho, civil engineers, Westminster. While residing in London he became a student in the engineering department of University College, where he had the benefit of instruction of a high order from Professor A. B. W. Kennedy. After a year or two Mr. Burnet returned to Glasgow, and about a dozen years ago he commenced business on his own account as an engineer, choosing more especially the department of boiler-making, for which purpose he erected the well-known works at Moore Park, Govan. A few years after he began the business, he was joined, at his own request, by a partner, in the person of Mr. Sinclair Couper, who had been a fellow apprentice with him. The business at the Moore Park Works was thenceforward carried on under the designation of Messrs. Lindsay Burnet & Co., and from these works there has been an extensive and constantly growing output of boilers and boiler

plate work to home and export order. Mr. Burnet was not only a specialist in designing and constructing steam boilers, but he latterly devoted very much attention to the deeper kindred questions connected with the combustion of coals and other fuels.

He was elected an Honorary Member, March, 1890, and died 14th March, 1895.

Christopher Atkinson Farmer was elected an Ordinary Member in 1875. For many years he acted as Manager of the firm of engineers and millwrights, in Adelphi Street, Salford, of which his brother, the late Sir James Farmer, was the head.

He took an earnest interest in all matters appertaining to the Association, and during his twenty years of membership he had been several times on the Committee of Management, and at the time of his death was a member of that body. He died very suddenly, January 31st, 1895, aged 51.

James Hall was elected an Ordinary Member in 1864. About the year 1859 he became connected with the firm of Messr. J. Robinson & Co., Salford, and remained there till the early part of 1895, when he retired, being then 74 years of age.

Mr. Hall's quiet unostentatious character prevented him from taking a very prominent part in the Association, but at the same time there were few meetings held at which he was not present.

He died suddenly, December 14th, 1895, deeply regretted by a wide circle of friends.

Robert Kilgour was elected an Ordinary Member in December, 1884, and at that time he held the position of foreman fitter, &c., with the firm of Messrs. Kendal & Gent, Salford.

Subsequently he removed to London, connecting himself with Messrs. Z. de Ferranti & Co. Unfortunately, however, he was stricken with a grave disease which practically rendered him incapable of following his employment. In may, 1893, he was compelled to resign his position, and he lingered till June 29th, 1895, when he suddenly died, aged 54.

George Vickers was elected an Ordinary Member in 1864. He died January 27th, 1895, aged 68 years.

Fred Meixner was elected an Ordinary Member in 1866. He died August 12th, 1895.